PATLITE®

New Frontiers in Safety, Security and Comfort.

Complete

# GENERAL CATALOG

www.patlite.com

Courtesy of Steven Engineering, Inc. - (800) 258-9200 - sales@steveneng.com - www.stevenengineering.com

# PATLITE is Number 1 for Signaling Technology.

Combining innovative LED technology and advanced optical design, PATLITE's signaling products deliver the highest level of illumination and reliability with protection up to IP-69K. Featuring a broad selection of models, sizes, designs and optional accessories, you can find the best solution for specific requirements. PATLITE's quality standard guarantees long-term customer satisfaction in diversified applications. There is no better choice for signaling products than PATLITE for now and the future.
PATLITE is number one in the world for signaling solutions.

## Outstanding Illumination

PATLITE's high-intensity LEDs and innovative lens design ensures outstanding illumination and exceptional brightness from any direction and distance.

## Patented Reflection System

PATLITE's patented reflection system is optimized for full illumination over the entire lens.

## Low Power Consumption

PATLITE's high-intensity LEDs are eight times more efficient than conventional incandescent bulbs.

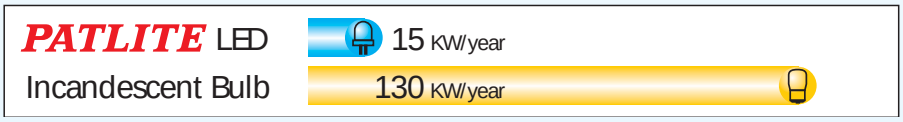


## Long Service Life and Reliability

PATLITE's high-intensity LEDs guarantees an extended service life of 60,000 hours. That is more than 5 years of continuous operation!

Note: For one LED module and one bulb with continuous operation

## Reduced Maintenance and Labor

PATLITE's high-intensity LEDs drastically reduces costly maintenance requirements for replacing bulbs. The life of PATLITE's high intensity LEDs is over 16 times longer than conventional incandescent bulbs.

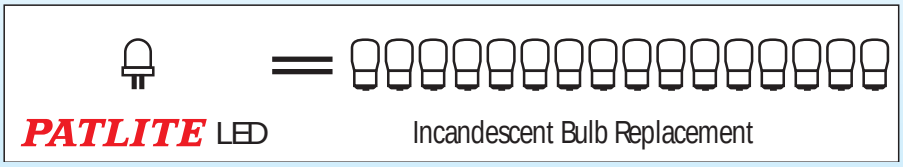


Note: Both with continuous operation

## Environmentally Responsible

Many PATLITE products use lead-free technology, and are RoHS compliant. In addition, long-life LEDs reduce waste compared to conventional incandescent bulbs.

PATLITE ECO PROJECT

## Rugged and Robust Design

PATLITE's design with a center shaft in its signal tower ensures the structural integrity of the modules, promising protection against vibration and mishandling. Yet, it offers modularity and flexibility for changing the LED modules. The smooth-finished body surface prevents collection and adhesion of dust, making our products easy to clean. PATLITE's signaling products are constructed using world-class quality materials to withstand harsh production environments.

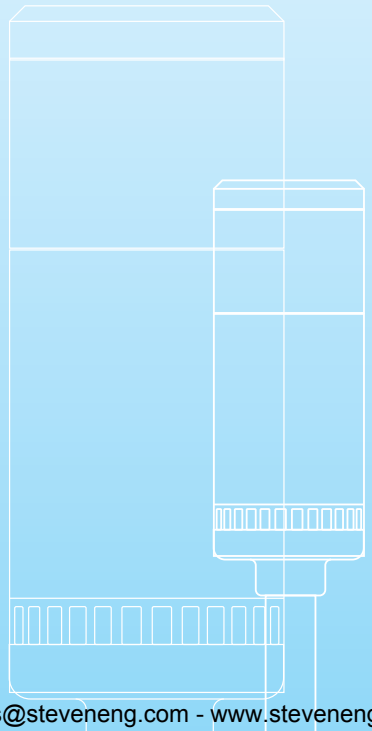

# “New Frontiers in Safety, Security and Comfort” is PATLITE`s mission.

PATLITE offers state-of-the-art equipment for process and industrial automation for over 60 years. Our Innovative and robust design, backed by a powerful commitment and years of knowledge, has made PATLITE the world’s best known manufacturer of the visual and audible signaling products.
We are also dedicated to the development of explosive and harsh-environment products to demonstrate our strong commitment to serving the industry with unique and innovative solutions.

In order to identify the diversified needs of our customers, and respond quickly and satisfactorily to those needs, we have implemented the POP (Point of Production) System together with a lean-manufacturing cell-based assembly system (combination, single, and flexible assembly). These new systems allow us to handle any order rapidly from single items to customized item orders.

We’ve also reduced development time and production cost by having our own in-house machinery to produce, design and manufacture metal moldings and plastic materials with the use of injection machinery.

From designing to production, from raw material to the finished product, we also manage our quality control throughout the entire process. This is how we maintain our world class quality reputation in the visual, audible signaling and networking information products.

■ From designing to production, quality control is managed throughout the process

- 3D CAD Design

- Metal Part Molding Manufacturing

- Electrical discharge machine

- Machining Center

- Injection molding machines

■ Wide-range of Innovative and World-class Quality Products

## World-wide Sales, Marketing and After-sales Support Network

Courtesy of Steven Engineering, Inc. - (800) 258-9200 - sales@steveneng.com - www.stevenengineering.com

# INTRODUCTION TO VISUAL & AUDIBLE SIGNAL APPLICATIONS

Since 1947, PATLITE has been at the forefront in developing and innovating a variety of signaling products. PATLITE's extensive product range covers highly advanced LED signal towers, beacons, audible alarms, annunciators, and work lights for industrial automation and security applications. As a top brand manufacturer, we aspire to become the global standard for signaling products.

PATLITE products are used in various industries to improve productivity, quality, safety, and security. See how PATLITE can improve your process by reviewing the examples in the following pages.

## PACKAGING / PROCESSING MACHINES

**Use PATLITE signaling devices to provide emergency management for automated carriers, belt conveyors, and other types of equipment on which cargo and/or devices are transported on.**

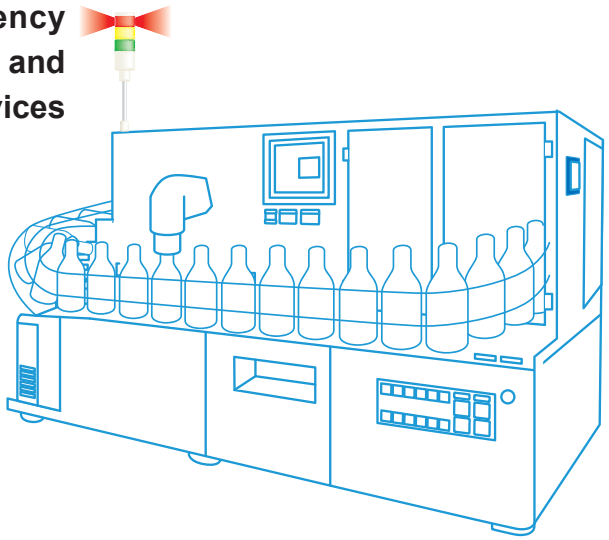

- **Recordable Smart Alert**
- **Smart Alert**
- **Signal Tower**
- **Signal Horn**

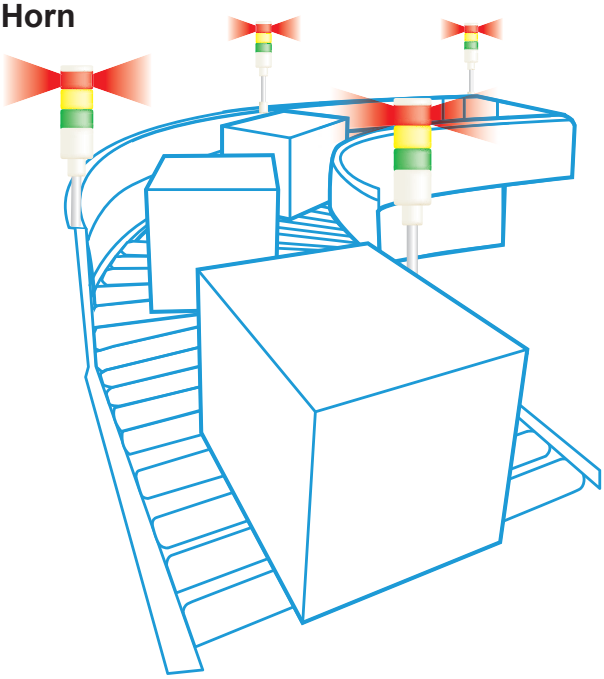

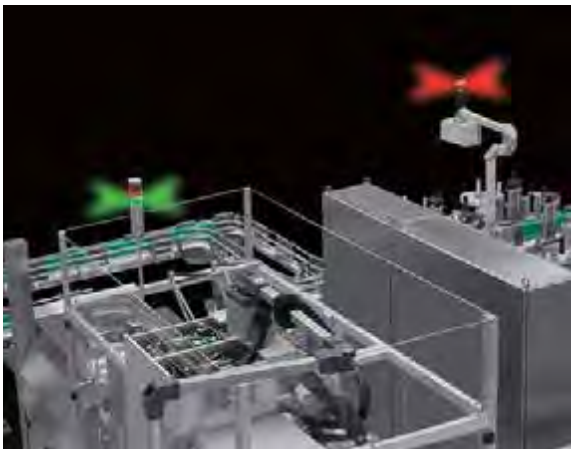



Courtesy of Steven Engineering, Inc. - (800) 258-9200 - sales@steveneng.com - www.stevenengineering.com

## SEMICONDUCTOR / LIQUID CRYSTAL

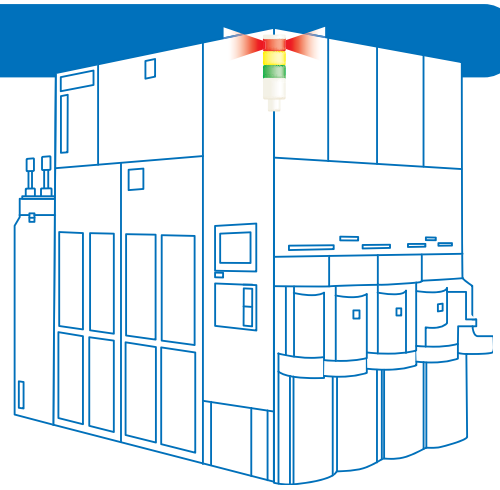

**Achieve high levels of performance and profitability with semiconductor manufacturing equipment. Real-time machinery status monitoring.**

- **Signal Tower**
- **Signal Horn**
- **Recordable Smart Alert**
- **Smart Alert**

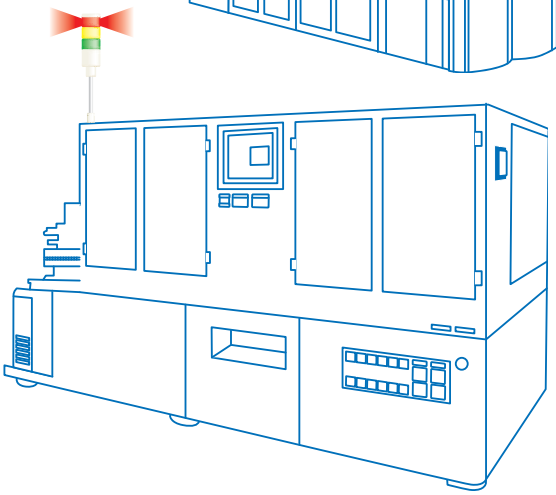

## PRINTING

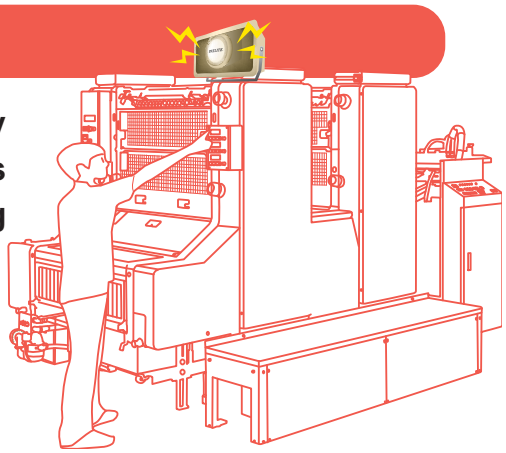

**Ensure safe operation by allowing operators to accurately ascertain the operating conditions of printing machines and sounding an alarm in the event of manufacturing losses or machine failure.**
**Enable operators of printing machines running at a high speed to quickly recognize manufacturing losses and equipment malfunctions by providing them with guidance on resolving paper-feed failures, replenishing ink at suitable times, and other such matters.**

- **Signal Tower**
- **Signal Horn**
- **Recordable Smart Alert**
- **Smart Alert**

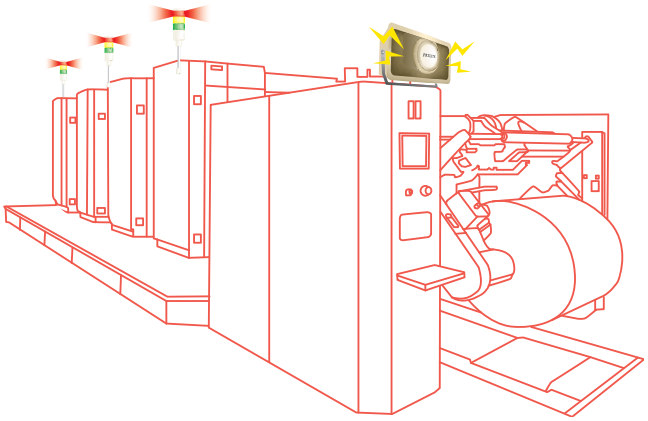



Courtesy of Steven Engineering, Inc. - (800) 258-9200 - sales@steveneng.com - www.stevenengineering.com

## INFORMATION COMMUNICATION

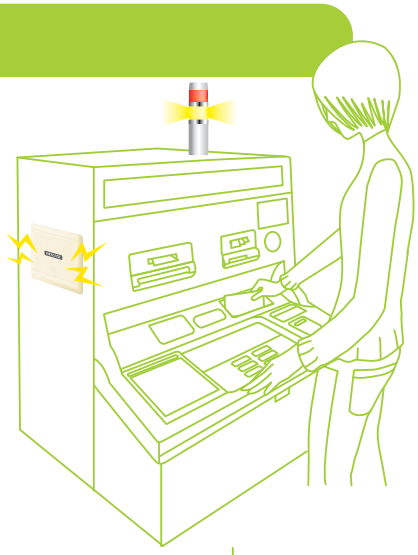

Enable appropriate actions to be taken at call centers, control rooms, and other information control centers.

Indicate the existence of incoming calls, system errors, etc, at call centers and other facilities. Also enable from remote locations to quickly recognize malfunctions and resolve them by displaying such information on the display panels for systems installed in control rooms at transport facilities and other sites.

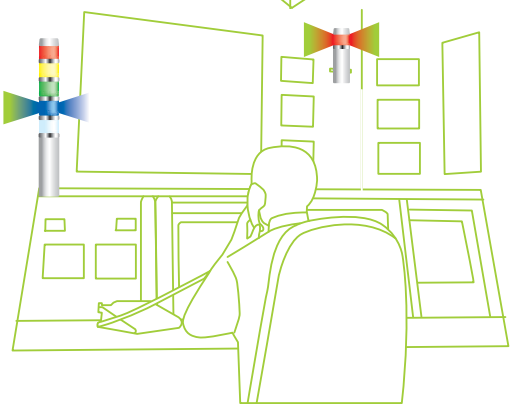

- Signal Tower
- Signal Horn
- Recordable Smart Alert
- Smart Alert
- Network Monitoring System

## CONSTRUCTION MACHINES

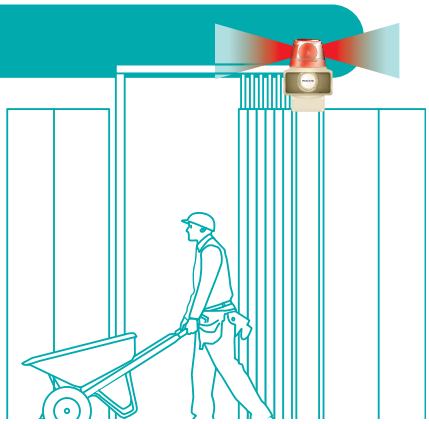

Prevent accidents involving construction machinery and other accidents occurring at dangerous locations such as construction sites.

Help to mitigate the effects of blind spots on large construction vehicles and machines with the use of LED beacons and other alarm devices. Our broad lineup of products, such as loud Smart Alerts, ensures that workers are aware of alarms even at noisy construction sites.

- Signal Tower
- Signal Horn
- Recordable Smart Alert
- Smart Alert

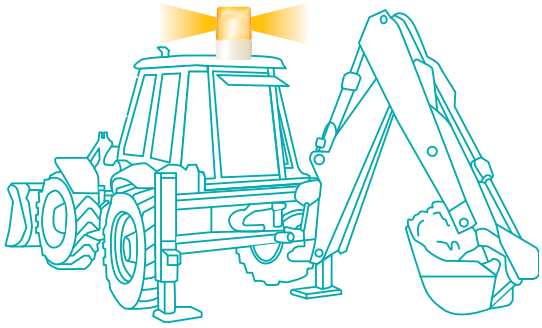



Courtesy of Steven Engineering, Inc. - (800) 258-9200 - sales@steveneng.com - www.stevenengineering.com

# Index of Ingress Protection defined by CEI / IEC 529

IP □□

| | Code No | |
|---|---|---|
| No protection. | 0 | No protection. |
| Protection against solid objects larger than ø50mm. | 1 | Protection against vertical falling drops of water. |
| Protection against solid objects larger than ø12mm. | 2 | Protection against dripping water when tilted up to 15° |
| Protection against solid objects larger than ø2.5mm. | 3 | Protection against spraying water. |
| Protection against solid objects larger than ø1mm. | 4 | Protection against splashing water. |
| Protection against dust-limited ingress (dust-protected). | 5 | Protection against water jets. |
| Total protection against dust (dust-tight). | 6 | Protection against heavy seas. |
| | 7 | Protection against the effects of immersion. |
| | 8 | Protection against submersion. |

## IP6X — Typical Environment

- Control/Switchboard Panel Lighting
- Machinery and Equipment Lighting

## IPX6 — Dusty Environment

- Machining/Factory Sites
- Farmsteads
- Signboards/Working Lights
- Commercial/Public Furnishings

## IPX7 — Watersplash Environment

## IPX9X — Water Exposed Environment / High Pressure Washing Environment

- Meat and Food Packaging/ Processing Industry
- Beverage Industry
- Pharmaceutical Industry

## Protection Rating Testing Requirements

- IP6X= The product is placed in a dust chamber with a negative pressure state so that dust is made to float, and there is no invasion inside.
- IPX6= A water nozzle with a diameter of 12.0mm is placed at a range from 2.5 to 3.0 meters with a water velocity of 100 litres per minute injected towards the test piece in an omni direction for three minutes or more without being affected by any harmful influences.
- IPX7= With the distance of 0.15 m from the top of the product to the water surface and a distance from the bottom of the product to the bottom of the tank at a distance of 1 m, it is submerged for 30 minutes with no harmful penetration.

* Since testing is performed under a controlled environment within provisions including a designated time, it does not consider conditions for continuous use.

**IP69K**

IP69K is the German DIN 40050 PART9 standard. It is defined as a protection regulation for high temperature and high-pressurized water. Water is heated up to 80°C and sprayed at a water pressure in the range from 80 to 100 bars at 14 to 16 liters per minute at the test object. The test object is at a distance of 100 to150 mm from the nozzle and sprayed in all directions at 0, 30, 60, and 90 degrees, then sprayed at a horizontal angle while it is being rotated, all done for a period of 30 seconds without being affected by water penetration.

Courtesy of Steven Engineering, Inc. - (800) 258-9200 - sales@steveneng.com - www.stevenengineering.com

# Our plan is to increase “Safety, Security, and Comfort” to serve the world.

CEO and President
Setsujiro Yamamoto

We earnestly seek to provide valuable goods and services from the customer’s viewpoint. We work to create a company that thrives on adversity, building a company for the enrichment of society.

We, the PATLITE group, have obtained customer support and established a dominant position in the Japanese market as a leading manufacturer of information display equipment by providing value added products and services guided by our corporate philosophy of “Safety, Security, and Comfort”.
The PATLITE group wants to achieve various social contributions and promote environmentally friendly products through our daily corporate activities, while constantly refining our corporate philosophy to reflect the demands of the current times. Our intention is to grow as an enterprise into a global business that can be relied upon by society and trusted by customers of the world, as we are in Japan, as a leading company in the industry by capitalizing on the strengths of our activities in our country. You can count on our growth. We ask for your continuous support and encouragement.



Courtesy of Steven Engineering, Inc. - (800) 258-9200 - sales@steveneng.com - www.stevenengineering.com

## Localized Product Development

While PATLITE implements local marketing strategies for the area, We are also building a sales network to meet the characteristics for each country and area. The customer's request is precisely understood and the product development details are considered for global standards as well as for local specifications. Furthermore, the various safety standards and environmental regulations of the world are taken into account.

## Global Support System Established

Unique value-added solutions are developed by being sensitive to and catching the customer's needs through our sales network and distribution channels established in primary markets for each country of the world. We established an organization for quick response and flexible support from the customer's viewpoint, in order to accelerate globalization. We promise to propose solutions and to become a reliable partner as a professional in the manufacturing industry.

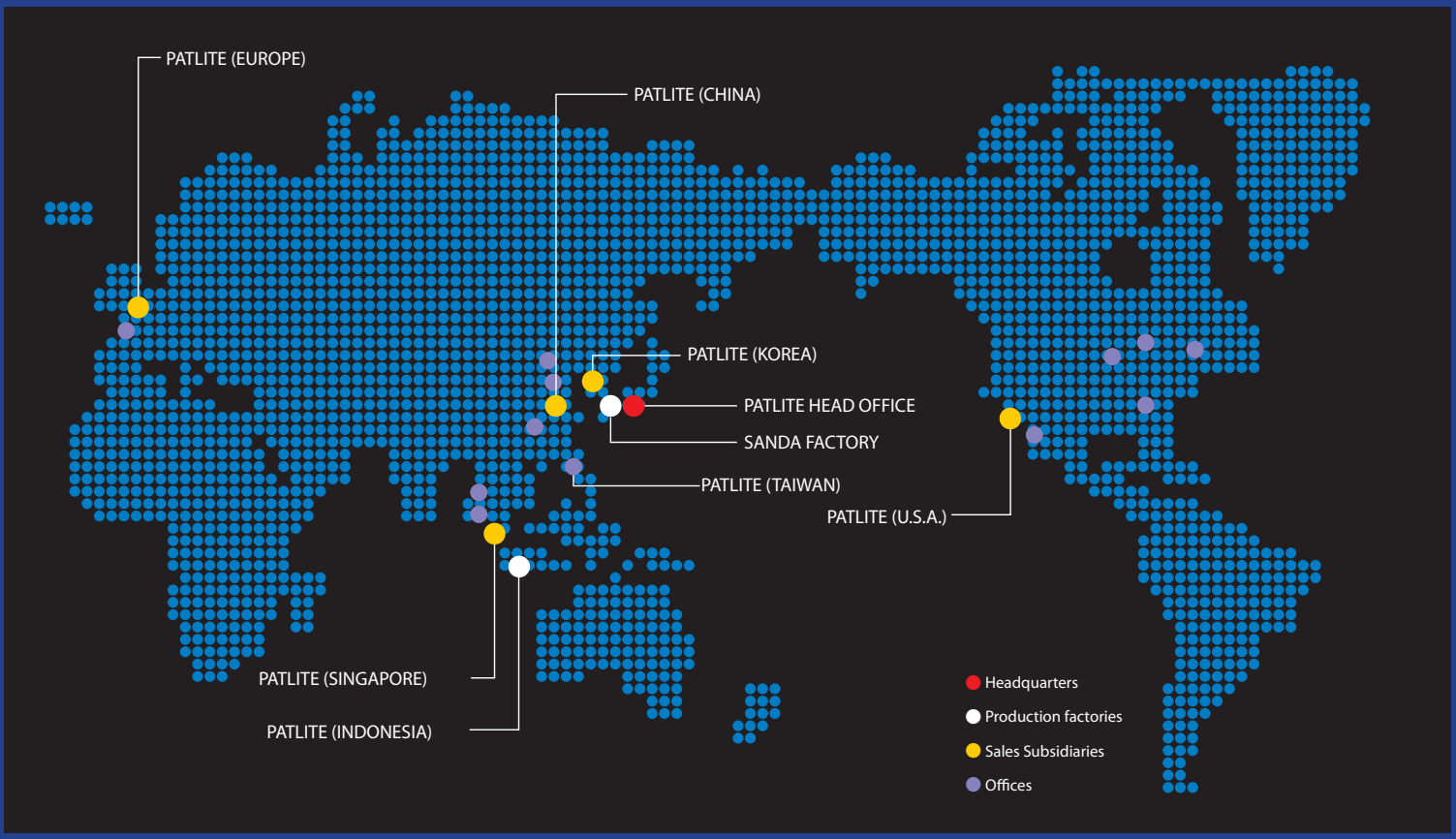




Courtesy of Steven Engineering, Inc. - (800) 258-9200 - sales@steveneng.com - www.stevenengineering.com

# Product Category Index


## New Products

| | |
|---|---|
| CLN | 18 |
| EHS | 20 |
| EHV | 20 |
| PSE | 23 |
| LFH | 24 |
| LFK | 25 |
| XPE | 26 |
| XME | 27 |
| LP3 | 28 |
| LP5 | 29 |

## Network Products

| | |
|---|---|
| WD | 32 |
| NHL | 34 |
| LE-K3 | 36 |
| WEP-K3 | 36 |
| LHE-C3 | 38 |
| LE-C3 | 38 |
| WEP-C3 | 38 |
| PHE-3FBE1 | 40 |
| PHC-100A | 41 |
| PHU-3 | 42 |
| VE25 | 44 |
| VE100 | 44 |

## Explosion-Safe Products

| | |
|---|---|
| EDLM | 48 |
| EDWM | 48 |
| AR-070 | 50 |
| AR-078 | 51 |
| LKEH-EX | 52 |
| EHS-EX | 53 |
| EHV-EX | 53 |
| CLN-EX | 54 |
| CLK-EX | 55 |
| CLA-EX | 56 |
| RES-A | 57 |

## Signal Tower

| | |
|---|---|
| ME-A | 60 |
| MES-A | 60 |
| MP | 62 |
| MPS | 62 |
| MP-C | 64 |
| LCE | 66 |
| LCE-U | 66 |
| LCS | 69 |
| LCS-U | 69 |
| LES-A | 71 |
| LE | 73 |
| LU5 | 76 |
| LMS | 80 |
| LME | 82 |
| LME-U | 82 |
| LME-N | 82 |
| LME-S | 86 |
| LME-Q | 86 |
| LHE-A | 89 |
| LU7 | 92 |
| LU7-XE | 98 |
| LS7 | 100 |
| WE | 104 |
| WEP | 104 |
| WME-A | 107 |
| LGE | 110 |
| WSST | 114 |
| HSST | 115 |

## Signal Lights

| | |
|---|---|
| NE-24 | 118 |
| KHE | 119 |
| PEW-A | 120 |
| PES-A | 120 |
| KPE-A | 122 |

## Revolving Warning Light

| | |
|---|---|
| SKHE | 126 |
| SKHEB | 126 |
| RLE | 127 |
| RKE | 128 |
| RKEB | 128 |
| RHE | 128 |
| RHEB | 128 |
| RKEM | 129 |
| RHEM | 129 |
| RU | 130 |
| RUP | 130 |
| RS | 130 |
| RH-A | 131 |
| RK-A | 131 |
| SKH-A | 132 |
| SKH-EA | 133 |
| SKP-A | 134 |
| SKL-A | 135 |
| SKC-A | 136 |
| SKV-A | 137 |
| SKHB-1006D | 138 |
| KP-A | 139 |
| WH-A | 140 |
| WK-A | 140 |
| HP | 141 |
| KG | 142 |
| HKFM | 143 |
| RLR | 144 |
| KUS | 146 |
| KJS | 148 |
| KJSB | 148 |
| KJ | 150 |
| KJB | 150 |

## LED Light

| | |
|---|---|
| CLA | 154 |
| CLK | 156 |

## Alarm Products

| | |
|---|---|
| BM | 160 |
| BD | 162 |
| BK | 164 |
| EWHS | 166 |

## Voice & Sound

| | |
|---|---|
| BSV | 174 |
| BDV | 176 |
| BKV | 178 |
| FV-127JP | 180 |

## Hybrid Products

| | |
|---|---|
| LKEH | 184 |
| RFT | 186 |
| RFV | 188 |
| RT | 190 |
| KJT | 192 |

## Optional Parts

| | |
|---|---|
| Optional Parts | 196 |
| DEB | 197 |
| MP-B | 197 |
| Melody Charts | 203 |
| Replacement Bulbs | 204 |




Courtesy of Steven Engineering, Inc. - (800) 258-9200 - sales@steveneng.com - www.stevenengineering.com

# Product Index


**A**

| | |
|---|---|
| AR-070 | 50 |
| AR-078 | 51 |

**B**

| | |
|---|---|
| BD | 162 |
| BDV | 176 |
| BK | 164 |
| BKV | 178 |
| BM | 160 |
| BSV | 174 |

**C**

| | |
|---|---|
| CLA | 154 |
| CLA-EX | 56 |
| CLK | 156 |
| CLK-EX | 55 |
| CLN | 18 |
| CLN-EX | 54 |

**D**

| | |
|---|---|
| DEB | 197 |

**E**

| | |
|---|---|
| EDLM | 48 |
| EDWM | 48 |
| EHS | 20 |
| EHS-EX | 53 |
| EHV | 20 |
| EHV-EX | 53 |
| EWHS | 166 |

**F**

| | |
|---|---|
| FV-127JP | 180 |

**H**

| | |
|---|---|
| HKFM | 143 |
| HP | 141 |
| HSST | 115 |

**K**

| | |
|---|---|
| KG | 142 |
| KHE | 119 |
| KJ | 150 |
| KJB | 150 |
| KJS | 148 |
| KJSB | 148 |
| KJT | 192 |
| KP-A | 139 |
| KPE-A | 122 |
| KUS | 146 |

**L**

| | |
|---|---|
| LCE | 66 |
| LCE-U | 66 |
| LCS | 69 |
| LCS-U | 69 |
| LE | 73 |
| LE-C3 | 38 |
| LE-K3 | 36 |
| LES-A | 71 |
| LFH | 24 |
| LFK | 25 |
| LGE | 110 |
| LHE-A | 89 |
| LHE-C3 | 38 |
| LKEH | 184 |
| LKEH-EX | 52 |
| LME | 82 |
| LME-N | 82 |
| LME-Q | 86 |
| LME-S | 86 |
| LME-U | 82 |
| LMS | 80 |
| LP3 | 28 |
| LP5 | 29 |
| LS7 | 100 |
| LU5 | 76 |
| LU7 | 92 |
| LU7-XE | 98 |

**M**

| | |
|---|---|
| ME-A | 60 |
| Melody Charts | 203 |
| MES-A | 60 |
| MP | 62 |
| MP-B | 197 |
| MP-C | 64 |
| MPS | 62 |

**N**

| | |
|---|---|
| NE-24 | 118 |
| NHL | 34 |

**O**

| | |
|---|---|
| Optional Parts | 196 |

**P**

| | |
|---|---|
| PES-A | 120 |
| PEW-A | 120 |
| PHC-100A | 41 |
| PHE-3FBE1 | 40 |
| PHU-3 | 42 |
| PSE | 23 |

**R**

| | |
|---|---|
| Replacement Bulbs | 204 |
| RES-A | 57 |
| RFT | 186 |
| RFV | 188 |
| RH-A | 131 |
| RHE | 128 |
| RHEB | 128 |
| RHEM | 129 |
| RK-A | 131 |
| RKE | 128 |
| RKEB | 128 |
| RKEM | 129 |
| RLE | 127 |
| RLR | 144 |
| RS | 130 |
| RT | 190 |
| RU | 130 |
| RUP | 130 |

**S**

| | |
|---|---|
| SKC-A | 136 |
| SKH-A | 132 |
| SKHB-1006D | 138 |
| SKHE | 126 |
| SKH-EA | 133 |
| SKHEB | 126 |
| SKL-A | 135 |
| SKP-A | 134 |
| SKV-A | 137 |

**V**

| | |
|---|---|
| VE25 | 44 |
| VE100 | 44 |

**W**

| | |
|---|---|
| WD | 32 |
| WE | 104 |
| WEP | 104 |
| WEP-C3 | 38 |
| WEP-K3 | 36 |
| WH-A | 140 |
| WK-A | 140 |
| WME-A | 107 |
| WSST | 114 |

**X**

| | |
|---|---|
| XME | 27 |
| XPE | 26 |




Courtesy of Steven Engineering, Inc. - (800) 258-9200 - sales@steveneng.com - www.stevenengineering.com

## Signal Tower

| | | | | | | | | | | | | | | | |
|---|---|---|---|---|---|---|---|---|---|---|---|---|---|---|---|
| Diameter (mm) | | 25 | | 30 | | | 40 | | | | 50 | | | | |
| Model | | ME-A | MES-A | MPS | MP | MP-C | LCE | LCE-U | LCS | LCS-U | LES-A | LE | LU5 | LU5-U | LU5-K |
| Page No. | | 62 | | 64 | | 66 | 68 | | 71 | | 73 | 75 | 78 | | |
| Voltage | AC/DC12V | | | | | | | | | | | | | | |
| | DC24V | ● | ● | | | | | | | | | | ● | ● | ● |
| | AC/DC24V | | | ● | ● | ● | ● | ● | ● | ● | ● | ● | | | |
| | AC90-250V | | | | | | ◎ | ◎ | | | | | | | |
| | AC100V | | | | | | | | | | | ● | | | |
| | AC120V | | | | | | | | | | | ● | | | |
| | AC220V | | | | | | | | | | | ● | | | |
| | AC230V | | | | | | | | | | | | | | |
| Body Color | White | | | | | | ● | | ● | | ● | ● | ● | | |
| | Silver | ● | ● | ● | ● | ● | | ● | | ● | | | | ● | |
| | Black | | | | | | | | | | | | | | ● |
| Sound Function | dB | | | | | | 85 | | | | | 85 | 85 | | |
| | Sounds | | | | | | 2 | | | | | 2 | 2 | | |
| Connector Type | Terminal | | | | | | | | | | | | ● | ● | ● |
| | M12 QD | | | | | ● | | | | | | | | | |
| Transistor Input | PNP | | | ● | ● | ● | ● | ● | ● | ● | ● | ● | ● | ● | ● |
| | NPN | ● | ● | ● | ● | ● | ● | ● | ● | ● | ● | ● | ● | ● | ● |
| Flashing Function | | | | | | | ● | ● | | | | ● | ● | ● | ● |
| IP Rating | | 42 | | 65 | | | 65 | | 54 | | 65 | 54 | 65 | | |

## Wall Mount Signal Tower

| | | | |
|---|---|---|---|
| Model | | WE/WEP | WME-A |
| Page No. | | 106 | 109 |
| Voltage | AC/DC24V | ● | ● |
| | AC90-250V | | ◎ |
| Body Color | White | ● | ● |
| | Chrome-plating | ● | |
| Sound Function | dB | 90 | 90 |
| | Sounds | 2 | 2 |
| Transistor Input | PNP | ● | ● |
| | NPN | ● | ● |
| Flashing Function | | ● | ● |
| IP Rating | | 65 | 65 |

## Network

| | | | | | | |
|---|---|---|---|---|---|---|
| Model | | LE-K3 | WEP-K3 | LE-C3 | LHE-C3 | WEP-C3 |
| Page No. | | 38 | | 40 | | |
| Voltage | DC 5V | | | | | |
| | DC 24V | ● | ● | ● | ● | ● |
| | AC120V | | | | | |
| Network | CompoNet | ● | ● | | | |
| | CC-Link | | | ● | ● | ● |
| | ZigBee | | | | | |
| Connection | LAN | | | | | |
| | USB | | | | | |
| | RS-232C | | | | | |
| | 2.4GHz | | | | | |
| Body Color | White | ● | ● | ● | ● | ● |
| | Silver | | | | | |
| | Black | | | | | |
| Mounting | Pole | ● | | ● | | |
| | Direct | | | | ● | |
| | Wall | | ● | | | ● |
| Sound Function | dB | 85 | 90 | 85 | 90 | 90 |
| | Sounds | 2 | 1 | 2 | 2 | 1 |
| IP Rating | | 23 | 23 | 23 | 65 | 23 |



Courtesy of Steven Engineering, Inc. - (800) 258-9200 - sales@steveneng.com - www.stevenengineering.com

| | | | | | | | | | | | | | | | |
|---|---|---|---|---|---|---|---|---|---|---|---|---|---|---|---|
| | | | | | | | | | | | | | | | |  |
| | 60 | | | | | | | 70 | | | | | | | 100 |
| | LMS | LME | LME-U | LME-N | LME-S | LME-Q | LHE-A | LU7-S | LU7-SU | LU7-SK | LU7 | LU7-U | LU7-K | LS7-H | LS7-C | LGE |
| | 82 | 84 | | | 88 | | 91 | 94 | | | | | | 102 | | 112 |
| | | | | | | | | | | | | | | | | |
| | | | | | ● | ● | | ● | ● | ● | ● | ● | ● | ● | ● | |
| | ● | ● | ● | ● | | | ● | | | | | | | | | ● |
| | | | | | | | | | | | ◎ | ◎ | ◎ | | | |
| | | ● | ● | | ● | ● | ● | | | | | | | | | ● |
| | | ● | ● | ● | | | ● | | | | | | | | | ● |
| | | ● | ● | | ● | ● | ● | | | | | | | | | |
| | | ● | ● | ● | | | | | | | | | | | | |
| | ● | ● | | | ● | ● | ● | ● | | | ● | | | ● | ● | ● |
| | | | ● | | ● | ● | | | ● | | | ● | | ● | ● | |
| | | | | ● | | | | | | ● | | | ● | ● | ● | |
| | | 90 | | | 90 | | 90 | 90 | | | | | | 90 | | 85 |
| | | 2 | | | 2 | | 2 | 2 | | | | | | 2 | | 1 |
| | | | | | | | | ● | ● | ● | ● | ● | ● | | | |
| | | | | | | | | | | | | | | | ● | |
| | ● | ● | ● | ● | ▲ | ▲ | ● | ● | ● | ● | ● | ● | ● | ● | ● | ● |
| | ● | ● | ● | ● | ● | ● | ● | ● | ● | ● | ● | ● | ● | ● | ● | ● |
| | | ● | ● | ● | ● | ● | ● | ● | ● | ● | ● | ● | ● | ● | | ● |
| | 65 | 65 | | | 65 | | 65 | 65 | | | | | | 65 | | 54 |

| | | | | | | | | | |
|---|---|---|---|---|---|---|---|---|---|
| | | | | | | | | | |
| | NHL | PHE-3FBE1 | PHC-100A | PHU-3 | WDR-LE | WDT-5E | WDT-6M | VE25 | VE100 |
| | 36 | 42 | 43 | 44 | 34 | | | 46 | |
| | | | | ● | | | | | |
| | ● | | ● | | ● | ● | ● | ● | ● |
| | | ● | | | | | | | |
| | | | | | | | | | |
| | | | | | | | | | |
| | | | | | ● | ● | ● | | |
| | ● | | ● | | | | | | |
| | | | | ● | | | | | |
| | ● | ● | ● | | | | | ● | ● |
| | | | | | ● | ● | ● | | |
| | ● | ● | ● | | ● | ● | ● | | |
| | | | | ● | | | | | |
| | | | | | | | | ● | ● |
| | | | | | | | | | |
| | | | | ● | ● | | | ● | ● |
| | | | | | ● | | | | ● |
| | 80 | 85 | | | | | | | |
| | 4 | 2 | | 1 | | | | | |
| | 20 | - | - | 20 | - | - | - | - | - |



Courtesy of Steven Engineering, Inc. - (800) 258-9200 - sales@steveneng.com - www.stevenengineering.com

## Revolving Warning Light

| | | | | | | | | | | | | | | | | |
|---|---|---|---|---|---|---|---|---|---|---|---|---|---|---|---|---|
| Diameter (mm) | | 82 | | | 100 | | | | | | | | | | 118 | 138 |
| Model | | RLE | RU | RS | RKE | RKEM | RHE | RHEM | RH-A | RK-A | SKHE(B) | SKH-EA | WH-A | WK-A | SKH-A | SKP-A |
| Page No. | | 129 | 132 | | 130 | 131 | 130 | 131 | 133 | | 128 | 135 | 142 | | 134 | 136 |
| Voltage | DC12V | ● | ● | ● | ● | ● | ● | ● | ● | ● | ● | ● | ● | ● | ● | ● |
| | DC24V | ● | ● | ● | ● | ● | ● | ● | ● | ● | ● | ● | ● | ● | ● | ● |
| | AC24V | | ● | ● | | | | | | | | | | | ● | |
| | DC48V | | | | ● | | ● | | | | | | | | | ● |
| | AC100V | ● | ● | ● | ● | | ● | | ● | ● | ● | ● | ● | ● | ● | ● |
| | AC120V | | | | | | | | ● | ● | | | | | | |
| | AC200V | | | | ● | | ● | | ● | ● | ● | ● | ● | ● | ● | ● |
| | AC220V | ● | ● | ● | | | | | | | | | | | | |
| | AC240V | | ● | ● | | | | | ● | ● | | | | | | |
| | AC100-200V | | | | | ● | | ● | | | | | | | | |
| Body Color | White | ● | ● | ● | ● | ● | ● | ● | ● | ● | | | ● | ● | | |
| | Silver | | | ● | | | | | | | | | | | | |
| | Black | | | | | | | | | | | | | | | |
| | Dome Color | | | | | | | | | | ● | ● | | | ● | ● |
| Dome Color | Red | ● | ● | ● | ● | ● | ● | ● | ● | ● | ● | ● | ● | ● | ● | ● |
| | Yellow | ● | ● | ● | ● | ● | ● | ● | ● | ● | ● | ● | ● | ● | ● | ● |
| | Green | ● | ● | ● | ● | ● | ● | ● | ● | ● | ● | ● | ● | ● | ● | ● |
| | Blue | ● | ● | ● | ● | ● | ● | ● | ● | ● | ● | ● | ● | ● | ● | ● |
| | Violet | | | | | | | | | | | | | | ● | |
| Sound Function | dB | | | | 88 | 88 | 88 | 88 | 90 | 90 | 88 | | 90 | 90 | 90 | |
| | Sounds | | | | 1 | 1 | 1 | 1 | 1 | 1 | 1 | | 1 | 1 | 1 | |
| Light | Bulb | | ● | ● | | | | | ● | ● | | ● | ● | ● | ● | ● |
| | LED | ● | | | ● | ● | ● | ● | | | ● | | | | | |
| | Halogen | | | | | | | | | | | | | | | |
| IP Rating | | 23 | 23 | 23 | 23 | 23 | 23 | 23 | 23 | 23 | 23 | 23 | 54 | 54 | 23 | 23 |
| | w/Gasket | 55 | 55 | 55 | 55 | 55 | 55 | 55 | 55 | | | | | | | |

## Explosion-proof Signal Tower

| | | | | | | | | | | | | |
|---|---|---|---|---|---|---|---|---|---|---|---|---|
| Model | | EDLM | EDWM | AR-070 | AR-078 | EHS/EHV | LKEH-FV | LKEH-FE | CLN | CLK | CLA | RES-A |
| Page No. | | 50 | | 52 | 53 | 55 | 54 | | 56 | 57 | 58 | 59 |
| Voltage | DC12V | | | | | | | | | | | ▲ |
| | DC24V | ● | ● | ● | ● | ● | ● | ● | ● | ● | ● | ▲ |
| | AC24V | ● | ● | ● | ● | | | | | | | |
| | DC48V | | | | | | | | | | | ● |
| | AC100V | ● | | | | | | | | | | ● |
| | AC120V | ● | | | | | | | | | | ▲ |
| | AC90-250V | | ◎ | | | | | | | | | |
| | AC220V | | | | | | | | | | | ● |
| | AC230V | | | | | | | | | | | ● |
| | AC240V | | | | | | | | | | | ▲ |
| Zone | 1, 21 | ● | ● | | | | | | | | | |
| | 2, 22 | ● | ● | ● | ● | ● | ● | ● | ● | ● | ● | |
| Conformity | CE | ● | ● | ● | ● | ● | ● | ● | ● | ● | ● | |
| | Ex | ● | ● | ● | ● | ● | ● | ● | ● | ● | ● | |
| IP Rating | | 66 | 66 | 65 | 65 | 65 | 54 | 54 | 66G/67G/69K | 66G/67G/69K | 66/67/69K | 66 |



Courtesy of Steven Engineering, Inc. - (800) 258-9200 - sales@steveneng.com - www.stevenengineering.com

| | | | | | | | | |
|---|---|---|---|---|---|---|---|---|
| 162 | | | | 182 | 186 | 187 | 204 | |
| KP-A | SKHB-1006D | SKL-A | RLR | HP | KG | SKC-A | SKV-A | HKFM |
| 141 | 140 | 137 | 146 | 143 | 144 | 138 | 139 | 145 |
| | | ● | ● | ● | ● | ● | ● | ● |
| ● | | ● | ● | ● | ● | ● | ● | ● |
| | | | | | | | | |
| | | ● | ● | | | | | |
| ● | | ● | | | ● | ● | ● | |
| ● | | | | | | | | |
| ● | | ● | | | | ● | ● | |
| | | | | | | | | |
| | | | | | | | | |
| | | | ● | | | | | |
| ● | ● | | | | | | ● | |
| | | ● | | | | | | |
| | | | ● | ● | ● | | | |
| | | ● | | | | ● | | |
| ● | | ● | ● | ● | ● | ● | ● | ● |
| ● | | ● | ● | ● | ● | ● | ● | ● |
| ● | | ● | ● | | | ● | | ● |
| ● | | ● | ● | ● | | ● | | ● |
| | | | | | | | | |
| | 75 | | | | | | | |
| | 1 | | | | | | | |
| ● | ● | ● | | | ● | ● | ● | |
| | | | ● | | | | | |
| | | | | ● | | | | ● |
| 23 | 23 | 23 | 66 | | 23 | 23 | 66 | |
| | | | | | | | | |

## Cube Tower

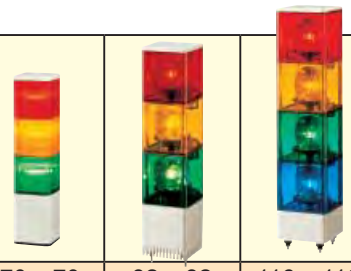

| | | | | |
|---|---|---|---|---|
| Size (mm) | | 70 x 70 | 82 x 82 | 116 x 116 |
| Model | | KUS | KJS(B) | KJ(B) |
| Page No. | | 148 | 150 | 152 |
| Voltage | DC12V | | ● | |
| | DC24V | ● | ● | ● |
| | AC24V | ● | | |
| | AC100V | ● | ● | ● |
| | AC120V | ● | ● | ● |
| | AC220V | ● | ● | ● |
| Body Color | Ivory White | ● | ● | ● |
| Alarm Function | dB | 80 | 85 | 85 |
| | Tones | 1 | 1 | 1 |
| Transistor Input | PNP | | ● | |
| | NPN | | | |
| IP Rating | | 54 | 23 | 23 |

## Signal Light

| | | | | | | | | | | | |
|---|---|---|---|---|---|---|---|---|---|---|---|
| Diameter (mm) | | 57 | 100 | | | 107 | 82 | | 162 | | 187 |
| Model | | NE-24 | KHE | LFH | LFK | PEW-A | PES-A | PSE | KPE-A | XPE | XME |
| Page No. | | 120 | 121 | 26 | 27 | 122 | 122 | 25 | 124 | 28 | 29 |
| Voltage | DC12V | | | ● | ● | | | ● | | ● | ● |
| | DC24V | ● | ● | ● | ● | ● | ● | ● | | ● | ● |
| | AC24V | | | | | ● | ● | | | | |
| | DC48V | | | ● | ● | | | | | | |
| | AC100-230V | | | ◎ | | | | ◎ | | ◎ | ◎ |
| | AC100V | | | | | ● | ● | | ● | | |
| | AC120V | | | | | ● | ● | | | | |
| | AC200V | | | | | ● | ● | | | | |
| | AC220V | | | | | | | | ● | | |
| | AC230V | | | | | ● | ● | | | | |
| Body Color | White | ● | ● | | ● | ● | ● | ● | ● | | |
| | Silver | | ● | | | ● | | | | | |
| | Black | | | ● | | | | | | | |
| Transistor Input | PNP | ● | ● | | | | ● | | ● | | |
| | NPN | ● | ● | | | ● | | | | | |
| Sound Function | | | | | | ● | | | | | |
| IP Rating | | 65 | 23 | 66 | 55 | 54 | 23 | 23 | 23 | | |
| | w/Gasket | | 55 | | | | 55 | | | | |



Courtesy of Steven Engineering, Inc. - (800) 258-9200 - sales@steveneng.com - www.stevenengineering.com

## LED Lights

| | | 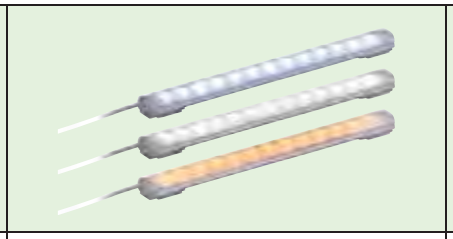 | | | | | | | 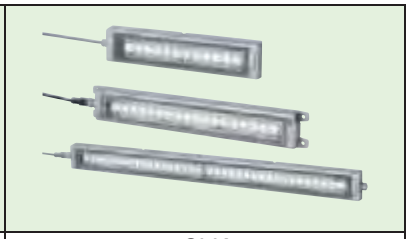 | | | | | | | | 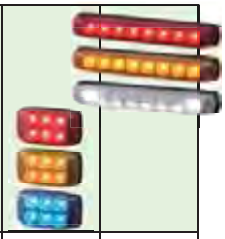 | |
|---|---|---|---|---|---|---|---|---|---|---|---|---|---|---|---|---|---|---|
| Model | | CLA | | | | | | | CLK | | | | | | CLN | | LP3 | LP5 |
| | | | | | | | | | -AG | -AG | -AS | -SG | -AG | -AS | -(P)T | -(P)T | | |
| Size (mm) | | 100 | 200 | 300 | 600 | 900 | 1200 | 1500 | 200 | 300 | | | 600 | | 85x85 | | 110 | 240 |
| Page No. | | 156 | | | | | | | 158 | | | | | | 20 | | 30 | 31 |
| Voltage | DC24V | ● | ● | ● | ● | ● | ● | ● | ● | ● | ● | ● | ● | ● | ● | ● | | |
| | DC12/24V | | | | | | | | | | | | | | | | ● | ● |
| Body Material | Aluminum | | | | | | | | ● | ● | ● | | ● | ● | ● | ● | | |
| | Stainless Steel | | | | | | | | | | | ● | | | | | | |
| | Polycarbonate | ● | ● | ● | ● | ● | ● | ● | ● | ● | | | ● | | | | ● | ● |
| Cover | Tempered Glass | | | | | | | | ● | ● | | ● | ● | | ● | ● | | |
| | PMMA Resin | | | | | | | | | | ● | | | ● | | | | |
| | Polycarbonate | ● | ● | ● | ● | ● | ● | ● | | | ● | | | ● | | | ● | ● |
| Light Color | Daylight | ● | ● | ● | ● | ● | ● | ● | ● | ● | ● | ● | ● | ● | | | | |
| | Natural White | ● | ● | ● | ● | ● | ● | ● | ● | ● | ● | ● | ● | ● | ● | ● | | |
| | Warm White | | | | | | | | | | | | | | ● | ● | | |
| | Red | | | | | | | | | | | | | | | | ● | ● |
| | Amber | ● | | ● | | | | | | | | | | | | | ● | ● |
| | Blue | | | | | | | | | | | | | | | | ● | ● |
| | White | | | | | | | | | | | | | | | | | ● |
| Resistance | Water | ● | ● | ● | ● | ● | ● | ● | ● | ● | ● | ● | ● | ● | ● | ● | ● | ● |
| | Oil | | | | | | | | | | | ● | | | ● | ● | | |
| | Dust | ● | ● | ● | ● | ● | ● | ● | ● | ● | ● | ● | ● | ● | ● | ● | ● | ● |
| IP Rating | | 66/67/69K | | | | | | | 66G/67G/69K | | | | | | 66G/67G/69K | | - | |

Courtesy of Steven Engineering, Inc. - (800) 258-9200 - sales@steveneng.com - www.stevenengineering.com

## Audible Alarms & Annunciators

| | | | | | | | | | | | | | |
|---|---|---|---|---|---|---|---|---|---|---|---|---|---|
| Model | | BM | BM-H | BM-D | BD | BK | BSV | BDV | BKV | EHS | EHV | EWHS | FV-127JP |
| Page No. | | 162 | | | 164 | 166 | 176 | 178 | 180 | 22 | | 168 | 182 |
| Voltage | DC12V | | | | ● | ● | | ● | ● | ● | ● | ● | |
| | DC24V | ● | ● | ● | ● | ● | ● | ● | ● | ● | ● | ● | ● |
| | AC24V | ● | ● | ● | | | | | | | | | |
| | DC48V | | | | | | | | | | | | |
| | AC100V | ● | ● | ● | ● | ● | | ● | ● | ● | ● | ● | |
| | AC120V | | ● | | | | | | | | | ● | |
| | AC200V | | | | | | | | | | | ● | |
| | AC220V | ● | ● | ● | | | | | | | | ● | |
| Body Color | Ivory White | | | | ● | ● | ● | ● | ● | ● | ● | ● | |
| | Red | | | | | | | | | | | ● | |
| | Yellow | | | | | | | | | | | ● | |
| | Black | ● | ● | ● | | | ● | ● | ● | ● | ● | | |
| | Silver | | | | | | ● | | | | | | |
| Sound Function | dB (at 1m) | 80 | 90 | 80 | 90 | 95 | 87 | 87 | 95 | 110 | 105/110 | 105 | |
| | Melody/Alarm | ● | ● | ● | ● | ● | | | | | ● | ● | |
| | MP3 | | | | | | ● | ● | ● | ● | ● | | ● |
| Channel Inputs | | 2 | 2 | 2 | 4 | 8 | 4(15) | 4(15) | 5(31) | 8(32) | 8(63) | 1 | 7(127) |
| Playback Sounds (sec) | | | | | 32 | 32 | 63 | 63 | 63 | 31 | 63 | | 480 |
| Sound Reduction | | | | | | | ● | | | ● | ● | | ● |
| Transistor Input | PNP | ● | | | ▲ | ▲ | ● | | | | | ● | ● |
| | NPN | ● | | | ● | ● | ● | ● | ● | ● | ● | ● | ● |
| IP Rating | | - | - | 34 | 54 | 54 | 54 | 54 | 54 | 54 | 54 | 53(65) | - |

## Hybrid Annunciators

| | | | | | | | | |
|---|---|---|---|---|---|---|---|---|
| Model | | LKEH-FE | LKEH-FV | RFT | RFV | RT-FE | RT-FV | KJT |
| Page No. | | 186 | | 188 | 190 | 192 | | 194 |
| Voltage | DC24V | ● | ● | ● | ● | ● | ● | ● |
| | AC24V | | | | | | | ● |
| | AC100V | ● | ● | ● | ● | ● | ● | ● |
| | AC200V | | | | | | | ● |
| | AC220V | ● | ● | ● | ● | ● | ● | |
| Sound Function | dB (at 1m) | 105 | | 90 | 90 | 105 | 105 | 95 |
| | Melody/Chimes | ● | | ● | | ● | | ● |
| | MP3 | | ● | | ● | | ● | |
| Channel Inputs | | | 32 | | 15 | | 8 | 4 |
| Playback Duration (sec.) | | | 63 | | 63 | | 32 | 16 |
| Transistor Input | PNP | ● | ● | | ▲ | | | |
| | NPN | ● | ● | ● | ● | ● | ● | ● |
| IP Rating | | 53 | 53 | 54 | 54 | 23 (65) | 23 (65) | 23 |



Courtesy of Steven Engineering, Inc. - (800) 258-9200 - sales@steveneng.com - www.stevenengineering.com

# Symbols Used in this Catalog

## Light Source

### LED

High-intensity LEDs with about 60,000 hours worth of service life and low power consumption that outlasts any bulb.

### Daylight Warm White

Temperature Color LEDs with a service life longer than incandescent and flourescent, but with lower power consumption.

### Bulb

Economical and readily available from PATLITE.

### Halogen

Small and bright halogen bulb with long-life.

## Sounds

### Electronic Sound 1

Alarm with sounds that are easy to recognize and gentle on the ears.

### 85dB at 1m

Maximum sound pressure level based on controlled environmental conditions and recorded contents (such as melodies, alarms or messages).

### 4 Channels

The number of channels available when dividing the total recording time to making several different messages.

### 63 Seconds

The maximum recording time using the standard bit rate for the product. (Standard bit rate is usually 64kb/sec)

Some of PATLITE's audible alarm products may contain copyrighted music or songs which Patlite has not applied for permission to use outside Japan, so please contact your local copyright association before using certain audible alarm products. This disclaimer may not apply if the copyright association has not claimed the copyright of the music or songs in a particular country or jurisdiction.

## Protection Resistance

### IP65K

Protection Resistance classification for dust-proof, water-proof, and water-jet resistance based on ingress protection index. (CEI/IEC 529).

### Explosion-Safe

Meets ATEX, NEC, CE and most other applicable Explosion-Safe standards.

## Specifications

### Φ65

The diameter size to fit into solutions like compact sized installations to fit perfectly onto that machine.

### Dual-face Reflector

The symmetrical dual-face reflectors emit a powerful rotating light.

### Network

Use the latest technology in network protocol to communicate between product and machine or product-to-product.

### NPN/PNP Open-collector

Open collector allows direct connection to a PLC without the use of voltage-contact relays, etc.

### Cable

Most products come with stranded wiring, but this corresponds to PATLITE products that offer cables as a standard or optional item.

### Terminals

PATLITE now offers products that come with terminal connections to meet customer demands for easier wiring options.

SOUND VOICE

Products that emit sounds or voices, or both.

MP3 ALARM VOICE

Sounds that are gentle on the ears in familiar sounds like melodies, and distinguishable alarms, along with MP3 programmable messages.

**CAUTION** For more details on these products, refer to the Instruction Manuals and specification sheets prior to use. Follow all safeguards to prevent fire, electric shock or other accidents. Specifications are subject to change without prior notice.

Courtesy of Steven Engineering, Inc. - (800) 258-9200 - sales@steveneng.com - www.stevenengineering.com

# New Products

# CLN

## LED Work Light

Daylight
Warm White

IP66G/67G/69K

## Water and Oil resistant high-power LED Work Light with an illuminance of 820 lx.
## Industry's thinnest design at 22.2mm.

***The industry's first based on corporate investigation**

- Made of aluminum alloy and tempered glass which is resistant to water, oil and coolants.
- Special design disperses heat radiation with illumination to surpass a 40W light bulb.
- The product lineup includes two colors (Daylight, Warm White) and two bracket options of Tilt (forward and back) or Pan & Tilt (forward, back and swivel left & right) to adapt to various scenarios.
- The operating temperature range of -40 to +60°C allows installation in sub-freezing temperature environments, such as cold storage warehouses.
- Conforms to CE and RoHS requirements.
- UL Listed (File No. E306141).

## How to Order

CLN-24-CD-PT

Movable Type
T : Tilt
PT : Pan/Tilt

Luminous Color
-CD (Daylight)
-CL (Warm White)

## Specifications

| Model | | CLN-24-[_]-T | | CLN-24-[_]-PT | |
|---|---|---|---|---|---|
| Color Code (Color) | | CD (Daylight) | CL (Warm White) | CD (Daylight) | CL (Warm White) |
| Color Temperature (typ.) | | 6500K | 2700K | 6500K | 2700K |
| Illumination (typ.) (Centered at DC 24V) | 1m | 820 lx | 620 lx | 820 lx | 620 lx |
| Total Luminous Flux (typ.) | | 550 lm | 330 lm | 550 lm | 330 lm |
| Rated Voltage | | DC 24V (Polarized) | | | |
| Operating Voltage Range | | DC 24V ±10% | | | |
| Protection Rating | | IP66G/67G (JIS C 0920)/69K (DIN 40050 part 9) (excluding Cable ends) | | | |
| Mounting Location/Direction | | Indoor / Any Direction | | | |
| Mass (Tolerance ±10%) | | 360g | | 430g | |



Courtesy of Steven Engineering, Inc. - (800) 258-9200 - sales@steveneng.com - www.stevenengineering.com

## Dimensions Unit: mm

- **Rear-mount Type (T/PT Type)**

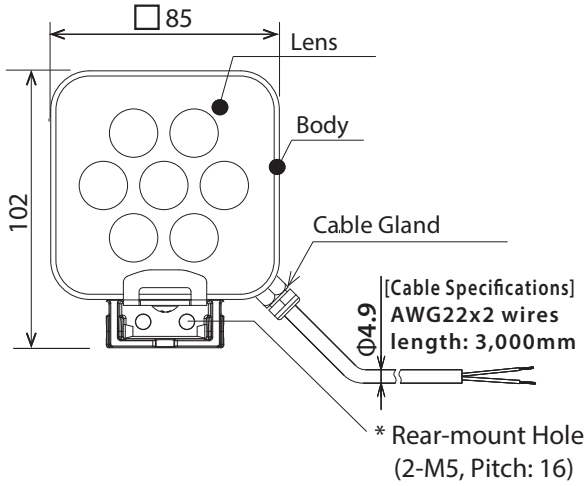


- **Tilt Type (T Type)**

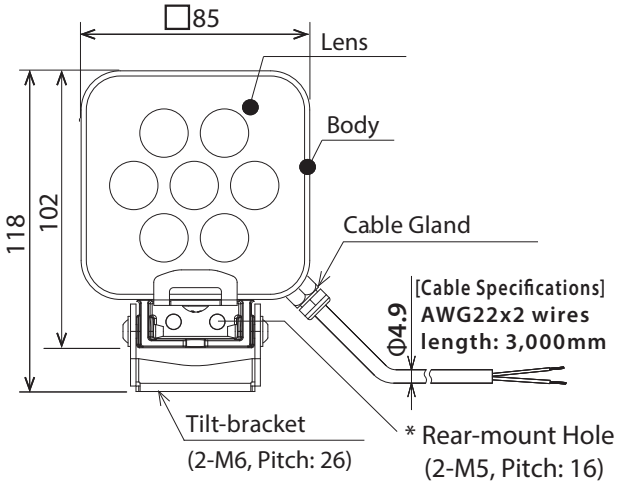


- **Pan/Tilt Type (PT Type)**

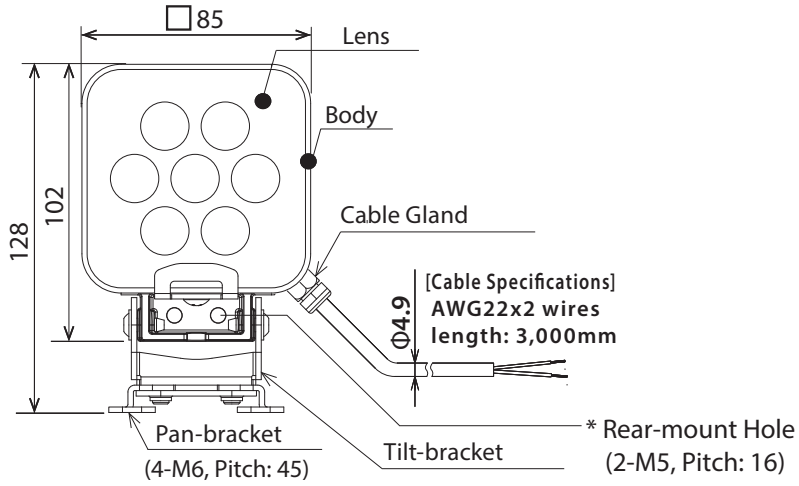


## Features

Tilt Type (T Type)

Has tilt adjustment of 180°, and can be folded up to a width of 33mm, making it easier to mount.

Floor Mount Example

Wall Mount Example

Ceiling Mount Example

Pan/Tilt Type (T Type)

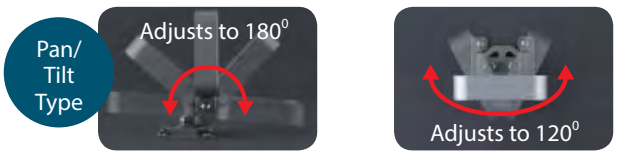


Has tilt adjustment of 180° with a pan angle of 120°, and can be folded up to a width of 43mm. Horizontal wall-mounting and free adjustment for any application.

Floor Mount Example

Wall Mount Example

Ceiling Mount Example

※ The tilt & pan/tilt brackets can also be removed for Rear Attachment applications.



Courtesy of Steven Engineering, Inc. - (800) 258-9200 - sales@steveneng.com - www.stevenengineering.com

# EHS/EHV

## MP3 Alert/Melody/Alarm Horn

110dB at 1m

EHV 63 Channels (Binary)

220 Seconds

IP65

NPN/PNP Open-collector

Cable

Terminal

## Exceptional Sound Quality Field Programmable MP3 Melody/Alarm Horn

FEATURES

- EHS comes with 32 preloaded melody and alarm sounds with adjustable volume up to 110dB (@ 1m).
- EHV comes with 63 preloaded crisp and clear melody and alarm sounds with adjustable volume up to 110dB (@ 1m).
- EHV offers a field-programmable MP3 function with a maximum of 220 sec. of recording time (@ 64bps) and an adjustable volume up to 105dB (@ 1m).
- Ideal for plant-wide notification, public address and process control.
- Robust, indoor and outdoor use with vibration resistance up to 4.5G.
- Protection Rating of IP65.
- UL464, CSA-C22.2 NO.205-M1983, FCC Part 15 Subpart B Class 4.
- CE, RoHS Compliant (EHS-M1 and EHV-M1 Only).

### EHS vs EHV (Functionality Comparisons)

| Model | Onboard Sounds | MP3 Playback | Playback Modes | No. of Playback Channels |
|---|---|---|---|---|
| EHS | 32 Sounds | No | 1 Mode | 8 ch Bit Input/ 32 ch Binary Input |
| EHV | 63 Sounds | Yes* | 4 Modes | 8 ch Bit Input/ 63 ch Binary Input |

* Internal Memory size of 2 Mbytes, maximum playback of 220 seconds at a 64kbit/sec rate

## How to Order

**EHS - □□E**

Model
EHS: Melody/Alarm Horn

Melody/Alarm Type
E: Type E

Rated Voltage
M1: DC 12-24V
M2: AC 100-240V
M3: DC 12-48V

Wiring Type
H: Cable
T : Terminal*

**EHV - □□G**

Model
EHV: MP3 Alert Horn

Melody/Alarm Type
G: Type G

Rated Voltage
M1: DC 12-24V
M2: AC 100-240V
M3: DC 12-48V

Wiring Type
H: Cable
T : Terminal*

* Terminal type not available for EHS-M3 or EHV-M3

## Dimensions

- Front View

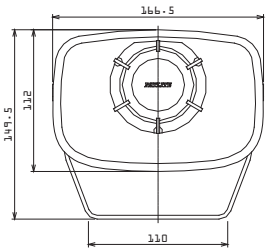


- Side View

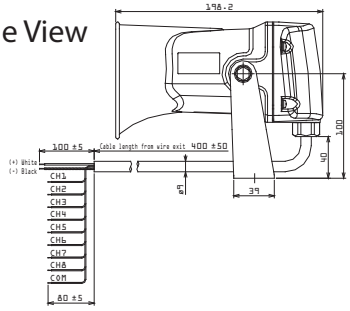


- Underside View

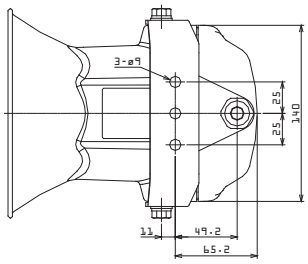




Courtesy of Steven Engineering, Inc. - (800) 258-9200 - sales@steveneng.com - www.stevenengineering.com

# Wiring

- Non-voltage (NPN) Wiring

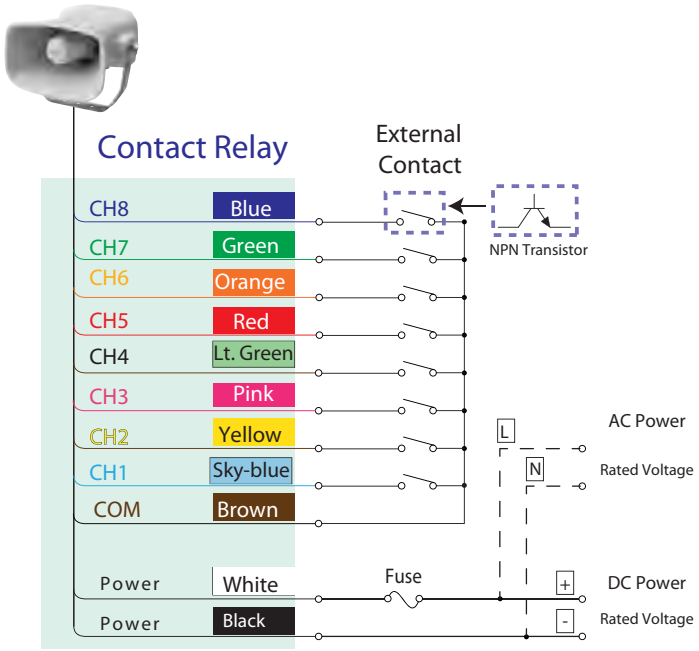


- PNP Wiring

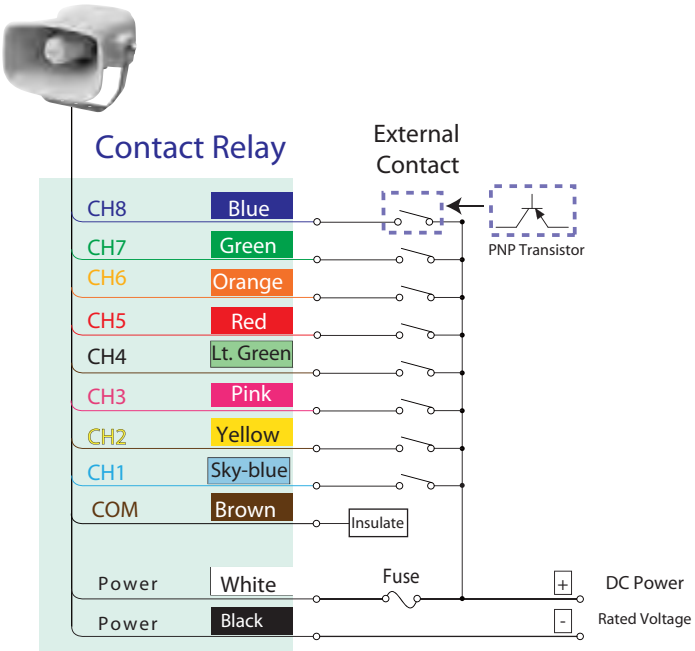


- Terminal (NPN)

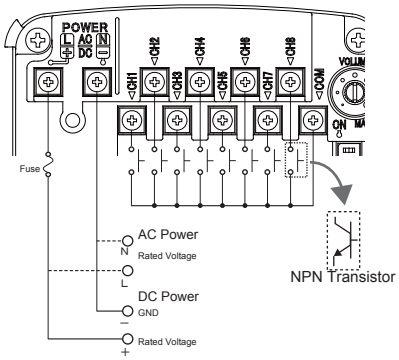


- Terminal (PNP)

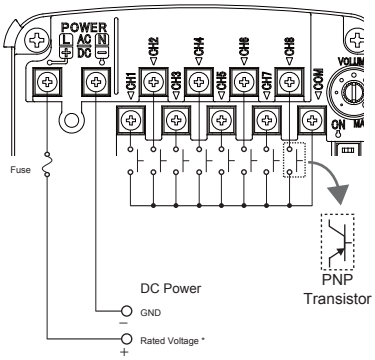


| Transistor Capacity (NPN & PNP) | |
|---|---|
| Current Capacity | $I_C \geq$ 15mA |
| Current Leakage | $I_L \leq$ 0.1mA |
| Withstand Voltage | $V_C \geq$ 35V |
| ON Voltage($V_{sat}$) | Less than 1V |

| Recommended Fuse | |
|---|---|
| Rated Voltage | 250V |
| Rated Current | 1A |
| Fuse Type | Standard |

| Maximum Inrush Current | |
|---|---|
| EH□-M1 | 12.5A |
| EH□-M2 | 23.0A |
| EH□-M3 | 45.0A |

# Specifications

**EHS**

| Model | Rated Voltage | Voltage Range | Power Consumption | Sound Pressure | Operating Temperature Range | No. of Playback Messages | Protection Rating | Wiring Type | Mass |
|---|---|---|---|---|---|---|---|---|---|
| EHS- M1H | DC 12 - 24V | DC 10.8V to 26.4V | 5.0W (DC24V NPN, Non-voltage Contact)<br>5.9W (DC24V PNP, Voltage Contact) | Alarm:<br>Max. 110dB (at 1m) | -20°C to +50°C<br>(85% RH or less) | Bit Input: 8<br>Binary Input: 32 | IP65 | Cable | 1.25kg |
| EHS- M1T | | | | | | | | Terminal | |
| EHS- M3H | DC 12 - 48V | DC 10V to 60V | 5.1W (DC48V NPN, Non-voltage Contact) | | | | | Cable | 1.15kg |
| EHS- M2H | AC 100 - 240V | AC 90V to 264V | 6.9W (AC240V NPN, Non-voltage Contact) | | | | | Cable | 1.25kg |
| EHS- M2T | | | | | | | | Terminal | |

**EHV**

| Model | Rated Voltage | Voltage Range | Power Consumption | Sound Pressure | Operating Temperature Range | No. of Playback Messages | Protection Rating | Wiring Type | Mass |
|---|---|---|---|---|---|---|---|---|---|
| EHV- M1H | DC 12 - 24V | DC 10.8V to 26.4V | 4.0W (DC24V NPN, Non-voltage Contact)<br>5.0W (DC24V PNP, Voltage Contact) | Alarm:<br>Max. 110dB (at 1m) | -20°C to +50°C<br>(85% RH or less) | Bit Input: 8<br>Binary Input: 63 | IP65 | Cable | 1.25kg |
| EHV- M1T | | | | | | | | Terminal | |
| EHV- M3H | DC 12 - 48V | DC 10V to 60V | 5.6W (DC48V NPN, Non-voltage Contact) | | | | | Cable | 1.15kg |
| EHV- M2H | AC 100 - 240V | AC 90V to 264V | 5.3W (AC240V NPN, Non-voltage Contact) | MP3:<br>Max. 105dB (at 1m) | | | | Cable | 1.25kg |
| EHV- M2T | | | | | | | | Terminal | |

Note 1: The sound pressure level is based on measurements under controlled conditions (voice-synthesized 1 kHz sine wave played back from a distance of 1 meter), therefore the surrounding environmental conditions and message content will result in different values for the sound pressure level.

Note 2: Even when starting two or more units simultaneously, a lag will occur during message playback.

- 4 Playback Modes

| | |
|---|---|
| Normal Playback | Designated audio message is played back by distinctive signal input. Audio message is played back once in case of one shot input, and audio message is repeated when the signal is input continuously. |
| Latest Input Priority Playback | When a signal is input during a message playback, the current message playing back will be stopped, and the message of the signal input will be played instead. |
| Memory Playback | Up to 23 audio message inputs can be memorized in order of input. After one playback is finished, the next memorized audio message will be played back. The inputs exceeding the limit will not be memorized. |
| Momentary Playback | Audio message is played back only while the signal input is maintained. Playback will be stopped when the signal input is stopped. |

## Get the Playlist Editor 2 (free from PATLITE)

- Contact us by E-mail located on the back of this catalog.
- Convert any message into MP3 data and save it onto an SD Card (with the use of the Playlist Editor 2).
- Insert the SD Card into a PATLITE MP3 product for easy programming.

| Application Software | Usable | Outline |
|---|---|---|
| PATLITE Playlist Editor 2 | Yes | This is a newer version of the PATLITE Playlist Editor. A playlist package can be created and the MP3 data and channel function assignment for the product can be rewritten. |
| FV-Win | No | This product is not compatible with the playlist created by FV-Win or the PATLITE Playlist Editor. However, the playlist can be changed into a playlist package using the PATLITE Playlist Editor 2. |
| PATLITE Playlist Editor | No | |

**Type-F** (For Japan Only)

| | | | | |
|---|---|---|---|---|
| Beep (slow intermittent) | Spring Melody | A Maiden's Prayer | Itsy Bitsy Spider | BANZAI SUKIDE YOKATTA |
| Stutter (rapid intermittent) | Game Intermission | Bach Minuet in Gmaj | The Music Man | NAMONAKI UTA |
| Bell (clear high-pitch) | Jalopy Horn | Annie Laurie | Spanish Romance | SOUSEINO AKUERION |
| Yelp (rapid siren) | Galactic Doorbell | London Bridge is falling down | Katyusha | MAMBO NO 5 |
| Rapid Hi-Lo | RR-crossing | Holdiridia | Ave Maria | The Parade of the Tin Soldiers |
| Melody Chime | Digital Train Whistle | Mary had a little Lamb | Grandfather's Clock | Turkey in the Straw |
| Synthesized Piano | Train Ride | The Camptown Races | RHYTHM AND POLICE | Aka tombo |
| Synthesized Bell | Starting Notice Chime1 | Cuckoo Song | ZANKOKUNA TENSHINO TEEZE | Funiculi, Funicula |
| Stutter + Bell | Starting Notice Chime2 | MURANO KAJIYA | MAJINGAA ZETTO | Furusato |
| Melody Chime | Starting Notice Chime3 | On the Bridge of Avignon | HATARAKU KURUMA | Beautiful Dreamer |
| Chime | Ending Notice Chime1 | Daydream Believer | NINGENTTE IINA | JOLLY HOLIDAY |
| Call Sign | Ending Notice Chime2 | Amaryllis | ROBINSON | |
| Galactic Hovercraft | Fur Elise | Mozart Symphony No. 40 | WORLD FOOTBALL ANTHEM | |

**Type-G** (All Countries)

| | | | | |
|---|---|---|---|---|
| Beep (slow intermittent) | Galloping Hi-Lo | Galactic Doorbell | Mozart Symphony No. 40 | Polka Tramblanka |
| Stutter (rapid intermittent) | Alien Chatter | RR-crossing | Ave Maria | O Vreneli |
| Bell (clear high-pitch) | Falling Crystals | Starting Notice Chime1 | Grandfather's Clock | KAERUNO GASSHOU |
| Yelp (rapid siren) | Inverted Reveille | Starting Notice Chime2 | The Parade of the Tin Soldiers | El Condor Pasa (If I Could) |
| Rapid Hi-Lo | Galactic Motor | Ending Notice Chime1 | If You're Happy and You Know It | Hungarian Dance No.5 |
| Melody Chime | Ringing Phone | Ending Notice Chime2 | Flea Waltz | William Tell Overture |
| Synthesized Piano | Two Tone | Fur Elise | Turkey in the Straw | Pomp and Circumstance |
| Synthesized Bell | Alarm Clock | Bach Minuet in Gmaj | The Battle Hymn of the Republic | Comedians' Galop |
| Stutter + Bell | Ringing Hi-Lo | Annie Laurie | J'ai perdu le do de ma clarinette | Nedelka |
| Melody Chime | Galactic Hovercraft | London Bridge is falling down | Can-can | Moonlight Serenade |
| Chime | Spring Melody | Mary had a little Lamb | Radetzky March | WAREWA UMINO KO |
| Call Sign | Game Intermission | The Camptown Races | Funiculi, Funicula | |
| Train Ride | Jalopy Horn | Amaryllis | Csikos Post | |

**Type-A** (For Japan Only)

| | | | |
|---|---|---|---|
| Beep (slow intermittent) | Stutter (rapid intermittent) | Bell (clear high-pitch) | Yelp (rapid siren) |
| Rapid Hi-Lo | Melody Chime | Synthesized Piano | Synthesized Bell |
| Stutter + Bell | Synthesized Melody Chime | Chime | Call Sign |
| Fur Elise | Maiden's Prayer | Bach Minuet in Gmaj | Annie Laurie |
| London Bridge is falling down | Hol-di-ri-Dia | Mary had a little Lamb | Camptown Races |
| Cuckoo Song | Village Blacksmith | On the Bridge of Avignon | Daydream Believer |
| Amaryllis | Mozart Symphony No. 40 | Quiet Lakeside | Ich bin ein Musikante |
| Spanish Romance | Katyusha | Grandfather's Clock | Ave Maria |

**Type-C** (For Japan Only)

| | | | |
|---|---|---|---|
| Beep (slow intermittent) | Stutter (rapid intermittent) | Bell (clear high-pitch) | Yelp (rapid siren) |
| Rapid Hi-Lo | Melody Chime | Synthesized Piano | Synthesized Bell |
| Stutter + Bell | Synthesized Melody Chime | Chime | Call Sign |
| Can't take my eyes off of you | Top of the World | The Entertainer | Amazing Grace |
| Amairono Kamino Otome | Les Champs-Elysees | Canon | Rara Sunshine |
| Uchuusenkan Yamamoto | Oshiete | Makenaide | Gonna Fly Now (Theme from "Rocky") |
| I don't Wanna Miss a Thing | Yozorano Mukou | Aiwa Katsu | Haruyo Koi |
| Gattsudaze | Odoru Ponpokorin | Imasugu Kisu Mi | Truth |

**Type-D** (For Japan Only)

| | | | |
|---|---|---|---|
| Beep (slow intermittent) | Stutter (rapid intermittent) | Bell (clear high-pitch) | Yelp (rapid siren) |
| Rapid Hi-Lo | Melody Chime | Synthesized Piano | Synthesized Bell |
| Runner | Mamotte Agetai | Chime | Call Sign |
| Iribiao Kikinagara | September | Doyoubino Koibito | Akino Kehai |
| Saafu Tengoku Sukii Tengoku | Iro White-blend | Happy Birthday | Hi Ho |
| I've been working on the Railroad | The Bear Song | Toys Go "Cha-cha-cha" | Konnako Irukana |
| Schubert's Lullaby | Rudolph the red-nosed Reindeer | She Wore a Yellow Ribbon | My Darling, Clementine |
| Yellow Rose of Texas | Yankee Doodle | When the Saints Go Marching In | Londonderry Air |

**Type-E** (All Countries)

| | | | |
|---|---|---|---|
| Beep (slow intermittent) | Stutter + Bell | Inverted Reveille | Annie Laurie |
| Stutter (rapid intermittent) | Melody Chime | Galactic Motor | London Bridge is falling down |
| Bell (clear high-pitch) | Chime | Ringing Phone | Mary had a little Lamb |
| Yelp (rapid siren) | Call Sign | Two Tone | Camptown Races |
| Rapid Hi-Lo | Train Ride | Alarm Clock | Amaryllis |
| Melody Chime | Galloping Hi-Lo | Ringing Hi-Lo | Mozart Symphony No. 40 |
| Synthesized Piano | Alien Chatter | Fur Elise | Ave Maria |
| Synthesized Bell | Falling Crystals | Bach Minuet in Gmaj | Grandfather's Clock |

### Use of Copyrighted Material

PATLITE Corporation has not applied for permission to use certain copyrighted music or songs recorded for Type-A, Type-C, Type-D and Type-F melody charts outside of Japan. Therefore, please contact the local copyright association for permission before using the product in case this product is used outside of Japan. Melody charts Type-E and Type-G are recommended for use outside of Japan as this playlist does not include copyrighted music or songs, and permission is not required.



Courtesy of Steven Engineering, Inc. - (800) 258-9200 - sales@steveneng.com - www.stevenengineering.com

# PSE

## LED Signal Light

RoHS CE

LED

IP23

Φ82

## New LED flashing beacon! Can outlast a conventional Xenon lamp and is available in four LED Colors.

## Dimensions

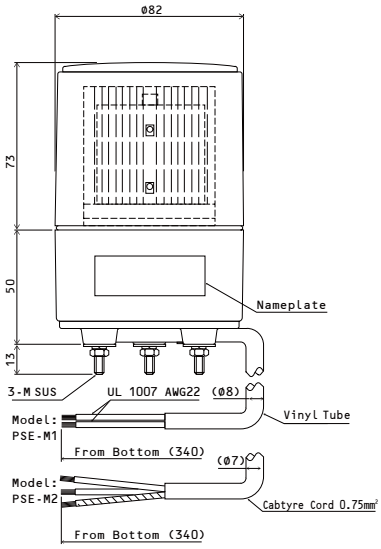


## Wiring

- M1 Type

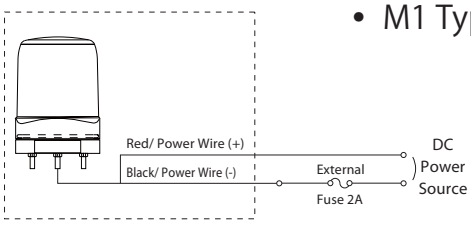


- M2 Type

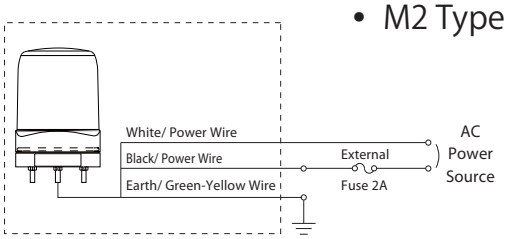


## Specifications

| Model | PSE-M1 | PSE-M2 |
|---|---|---|
| Rated Voltage | DC 12V - 24V | AC 100V-240V |
| Power Consumption | 2.4W (max.) | 3.2W (max.) |
| Maximum Operating Ambient Temperature | 60°C | |
| Protection Rating | IP23 | |
| Mounting Location | Indoor or Outdoor Use | |
| Flash Rate | 110 ±10rpm (Triple-flash) | |
| Mass | 0.30kg | 0.35kg |

## How to Order

**PSE-□-□**

Rated Voltage
M1: DC 12V-24V
M2: AC 100V-240V

Color
R: Red
Y: Amber
G: Green
B: Blue



Courtesy of Steven Engineering, Inc. - (800) 258-9200 - sales@steveneng.com - www.stevenengineering.com

# LFH

## LED Signal Light

RoHS

LED

IP66

Φ100

# New LED flashing beacon! Available in five outdoor visible LED Colors and has UL certification.

## Dimensions

- LFH

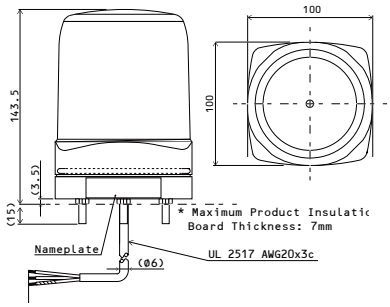


- LFH-M1

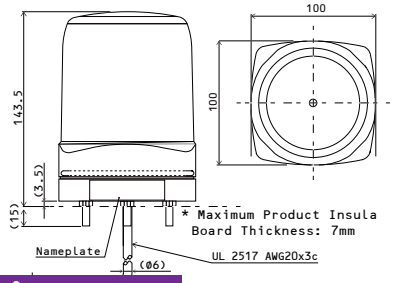


## Wiring

- LFH

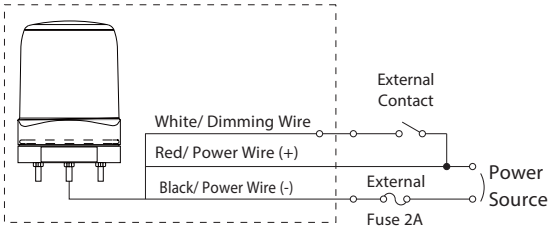


- LFH-M1

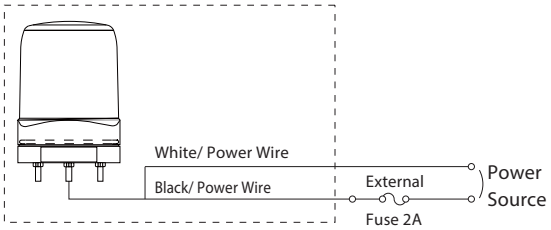


## Specifications

| Model | LFH-12 | LFH-24 | LFH-48 | LFH-M2 |
|---|---|---|---|---|
| Rated Voltage | DC 12V | DC 24V | DC 48V | AC 100 - 240V |
| Current Consumption (max) | 0.50A | 0.23A | 0.18A | 0.12A |
| Operating Ambient Temperature Range | -30°C to +70°C | | | -20°C to +60°C |
| Protection Rating | IP66 | | | |
| Mounting Location | Indoor or Outdoor Use | | | |
| Flash Rate | 110 ±10fpm (Triple-flash) | | | |
| Certifications | UL, CE*1, RoHS, FCC | | | |
| Mass | 0.57kg | | | 0.61kg |

*1 LFH-48 not CE certified.

## How to Order

**LFH- □ - □**

Rated Voltage
- 12: DC 12V
- 24: DC 24V
- 48: DC 48V
- M2: AC 100 - 240V

Color
- R: Red
- Y: Amber
- G: Green
- B: Blue
- C: Clear/White



Courtesy of Steven Engineering, Inc. - (800) 258-9200 - sales@steveneng.com - www.stevenengineering.com

# LFK

## LED Signal Light

LED

IP55

Φ100

# New LED flashing beacon! So bright, it has a dimming input.

## Dimensions

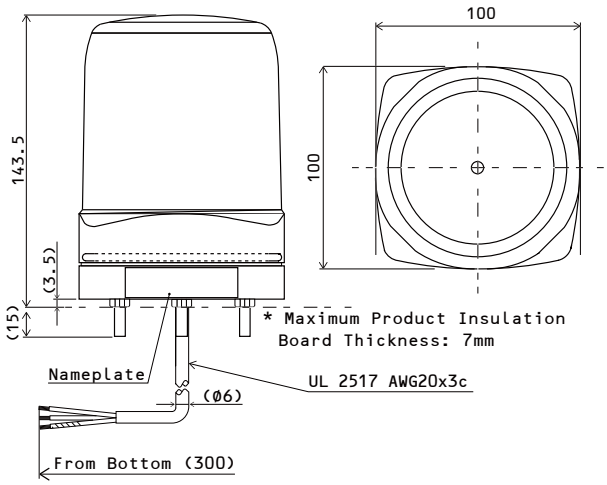


## Wiring

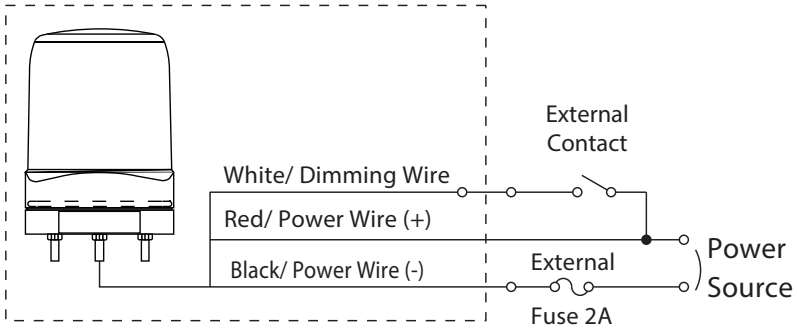


## Specifications

| Model | LFK-12S | LFK-24S | LFK-48S |
|---|---|---|---|
| Rated Voltage | DC 12V | DC 24V | DC 48V |
| Current Consumption (max) | 0.49A | 0.19A | 0.17A |
| Operating Ambient Temperature Range | -20°C to +60°C | | |
| Protection Rating | IP55 | | |
| Mounting Location | Indoor or Outdoor Use | | |
| Flash Rate | 140 ±14fpm (Triple-flash) | | |
| Certifications | CE*1, RoHS, ECE | | |
| Mass | 0.5kg | | |

*1 LFK-48 not CE certified.

## How to Order

**LFK-□S-□**

Rated Voltage
- 12: DC 12V
- 24: DC 24V
- 48: DC 48V

Color
- R: Red
- Y: Amber
- G: Green
- B: Blue
- C: Clear/White



Courtesy of Steven Engineering, Inc. - (800) 258-9200 - sales@steveneng.com - www.stevenengineering.com

# XPE

## LED Signal Light

LED

IP23

Φ162

## New LED flashing beacon! Available in four LED Colors.

FEATURES

- Long-lasting LED's greatly reduce maintenance costs.
- Indoors allows upright, inverted, and sideways installation; outdoors allows upright installation only.
- Main Body is made of impact and heat-resistant ABS resin.
- Dome lens is made of superior weather-resistant and light-translucent AS resin.
- Available Colors are Red, Amber, Green, and Blue.

## Specifications

| Model | XPE-12 | XPE-24 | XPE-M2 |
|---|---|---|---|
| Rated Voltage | DC 12V | DC 24V | AC 100 - 230V |
| Voltage Range | DC 9.5-15V | DC 20 - 28V | AC 90 - 250V |
| Current Consumption | 0.50A | 0.23A | 0.12A |
| Operating Ambient Temperature | -30°C to +70°C | | -20°C to +60°C |
| Protection Rating | IP23 | | |
| Mounting Location | Indoor or Outdoor Use | | |
| Flash Rate | 110 ±10fpm (Triple-flash Pattern) | | |
| Certifications | RoHS | | |

## How to Order

**XPE-□-□**

Rated Voltage
- 12: DC 12V
- 24: DC 24V
- M2: AC 100 -230V

Color
- R: Red
- Y: Amber
- G: Green
- B: Blue



Courtesy of Steven Engineering, Inc. - (800) 258-9200 - sales@steveneng.com - www.stevenengineering.com

# XME

## LED Signal Light

LED

IP23

Φ187

## New Large Sized LED flashing beacon! Available in three LED Colors.

FEATURES

- Extended product lifespan by using LED lights.
- Indoors allows upright, inverted, and sideways installation; outdoors allows upright installation only.
- Main body is made of a melamine baked finish with a corrosion-proof stainless steel (SUS 304) lens mounting fixture.
- Dome lens is made of superior weather-resistant and light-translucent AS resin.
- Mounting Bolts are drip-proof and made of rust-free stainless steel.
- Available Colors are Red, Amber, and Blue.

## Specifications

| Model | XME-12 | XME-24 | XME-M2 |
|---|---|---|---|
| Rated Voltage | DC 12V | DC 24V | AC 100 - 230V |
| Voltage Range | DC 9.5-15V | DC 20 - 28V | AC 90 - 250V |
| Current Consumption | 0.50A | 0.23A | 0.12A |
| Operating Ambient Temperature | -30°C to +70°C | | -20°C to +60°C |
| Protection Rating | IP23 | | |
| Mounting Location | Indoor or Outdoor Use | | |
| Flash Rate | 110 ±10fpm (Triple-flash Pattern) | | |
| Certifications | RoHS | | |

## How to Order

XME- □ - □

Rated Voltage
12: DC 12V
24: DC 24V
M2: AC100 - 230V

Color
R: Red
Y: Amber
B: Blue



Courtesy of Steven Engineering, Inc. - (800) 258-9200 - sales@steveneng.com - www.stevenengineering.com

# LP3

## LED Signal Light

LED

## How to Order

**LP3- M1□-□**

Size
3: 110mm × 60mm
(Lighting Body Dimensions)

Rated Voltage
M1: DC 12-24V
(Vehicle Onboard Use)

Terminal Resistor
Blank: With
S : Without

Color
R: Red
Y: Amber
B: Blue

## Wiring Example (Cascading)

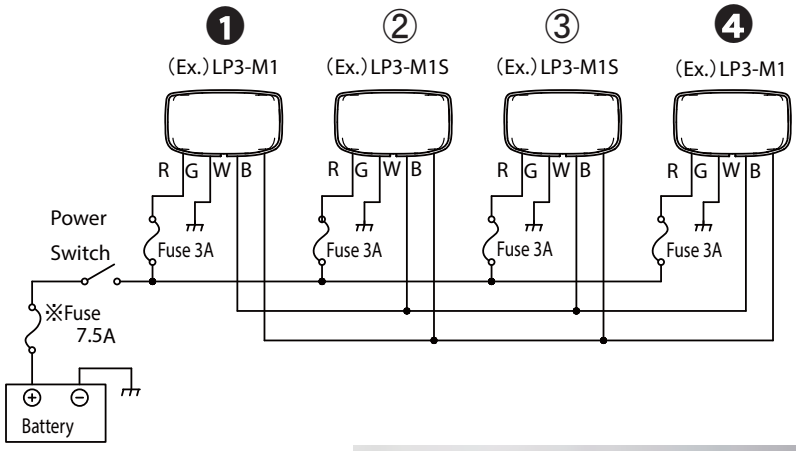


## Dimensions

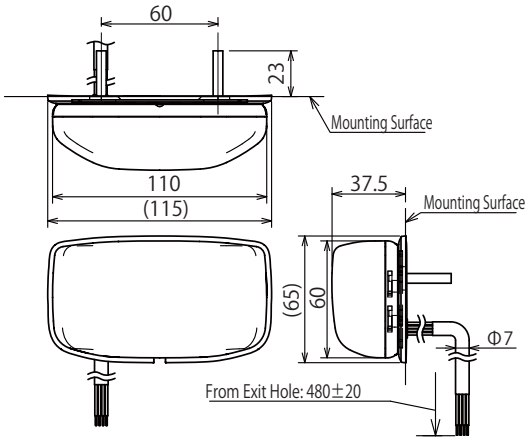

## Specifications

| Model | Rated Voltage | Operating Voltage Range | Current Consumption | Flash Pattern | Operating Temperature Range | Color | Mass |
|---|---|---|---|---|---|---|---|
| LP3-M1 | DC12/24V | DC 9.5 - 30.0V | Max.: 0.7A | Triple-flash | -30°C - +75°C | Red, Amber, Blue | 250g |



Courtesy of Steven Engineering, Inc. - (800) 258-9200 - sales@steveneng.com - www.stevenengineering.com

# LP5

## LED Signal Light

LED

## Wiring Example (Individual)

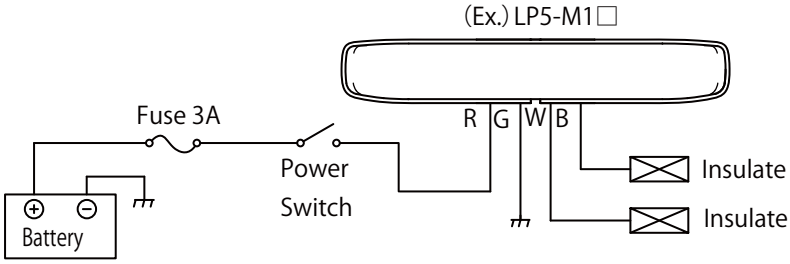


## How to Order

**LP5 - M1□-□**

- Size: 5: 240mm × 35mm (Lighting Body Dimensions)
- Rated Voltage: M1: DC 12-24V (Vehicle Onboard Use)
- Terminal Resistor: Blank: With; S : Without
- Color: R: Red; Y: Amber; W: White

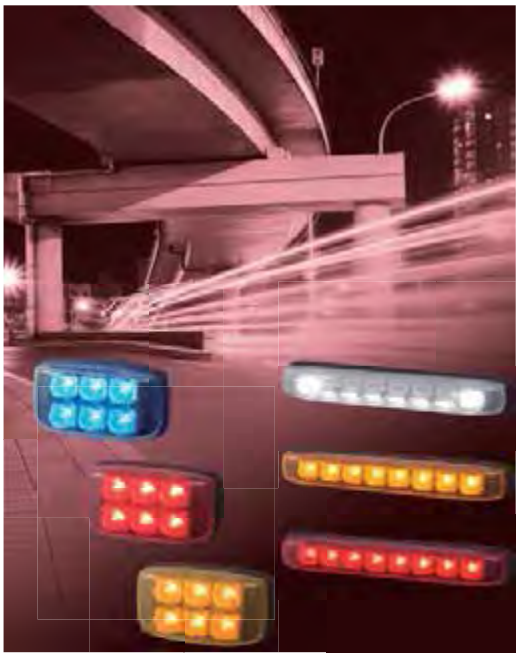

## Dimensions

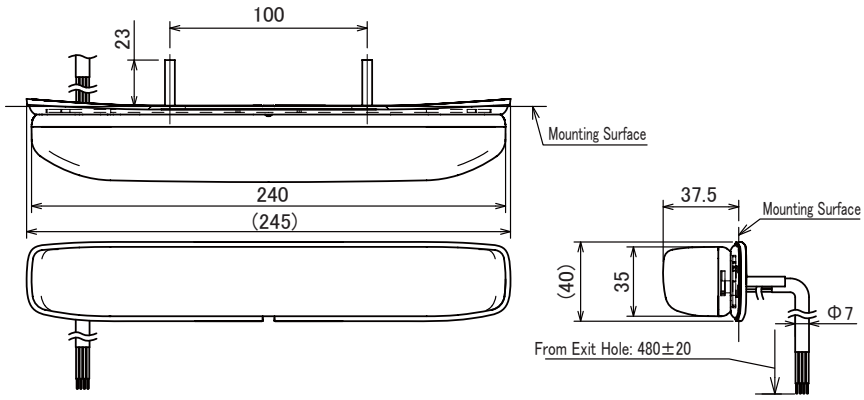


## Specifications

| Model | Rated Voltage | Operating Voltage Range | Current Consumption | Flash Pattern | Operating Temperature Range | Color | Mass |
|---|---|---|---|---|---|---|---|
| LP5-M1 | DC12/24V | DC 9.5 - 30.0V | Max.: 0.7A | Triple-flash | -30°C - +75°C | Red, Amber | 300g |
| LP5-M1-W | | | | Continous Lighting | | White | |



Courtesy of Steven Engineering, Inc. - (800) 258-9200 - sales@steveneng.com - www.stevenengineering.com

MEMO

For more details, visit our website at http://www.patlite.com

Courtesy of Steven Engineering, Inc. - (800) 258-9200 - sales@steveneng.com - www.stevenengineering.com

# Network Products

Courtesy of Steven Engineering, Inc. - (800) 258-9200 - sales@steveneng.com - www.stevenengineering.com

# WD

## Wireless Data Acquisition System

RoHS CE

WDT-6M Φ60 Fits LME

WDT-5E Φ50 Fits LE

Network

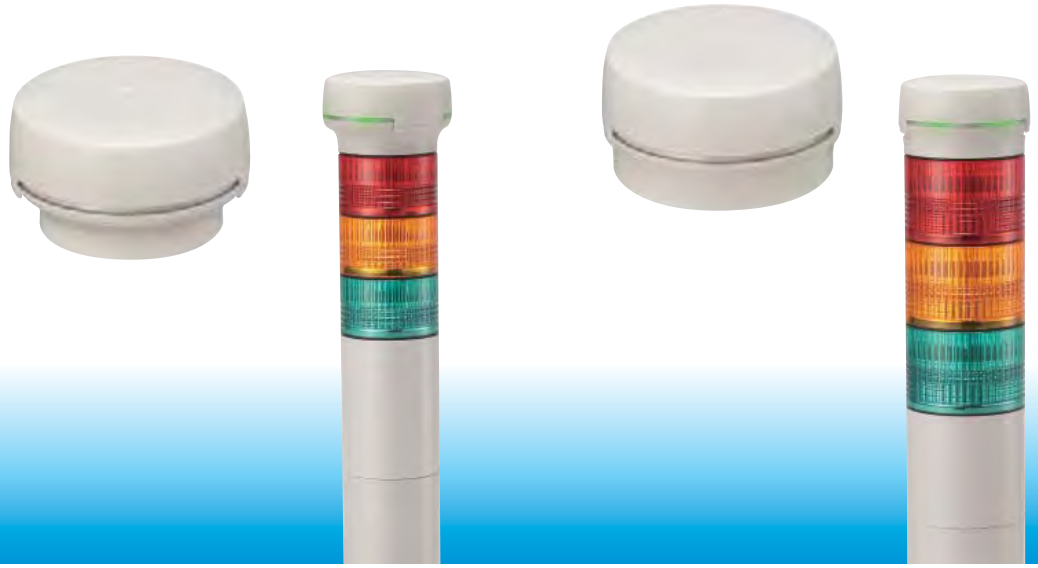

## Monitor remotely and collect data wirelessly from a PATLITE Signal Tower

PATLITE wireless add-on modules and receivers make PATLITE Signal Towers capable of sending electrical signals over a wireless network to a data center. PATLITE wireless add-on modules and receivers are a uniquely practical and economical solution for data acquisition, machine status remote monitoring, and supervisory control of industrial processes. The "AirGRID" is an effective solution for lean manufacturing and a visual factory. PATLITE wireless add-on modules comply with IEEE802.15.4, operating in the 2.4 GHz band.

1) Simply add-on to a PATLITE Signal Tower
   Operating conditions of Patlite signal towers installed on production machines or process systems can be transmitted wirelessly to a data center. Data acquisition and remote monitoring are possible instantly and economically.

2) Wireless technology of today eliminates tedious wire installation
   The "AirGrid" add-on wireless modules tap their power from the PATLITE Signal Towers and transmit their electrical signals to the data center. This can reduce wiring, component installation and other related costs.

3) Multi-hopping topology and high transmitting reliability
   With wireless multi-hopping, it minimizes potential transmitting failures or errors, adding a high level of stable operation and transmission reliability.

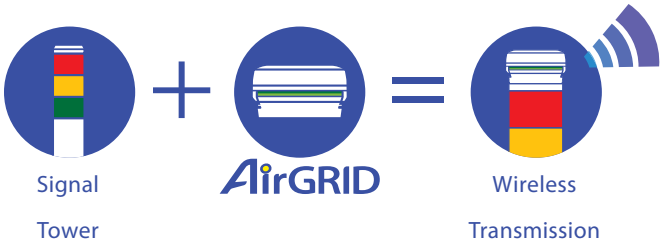


## Dimensions

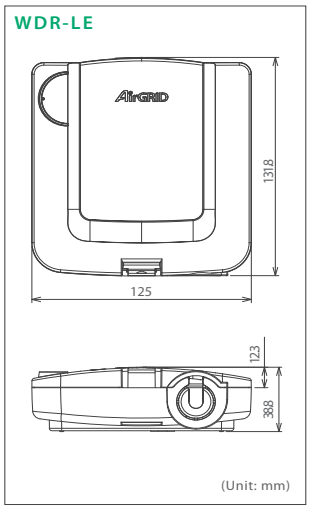


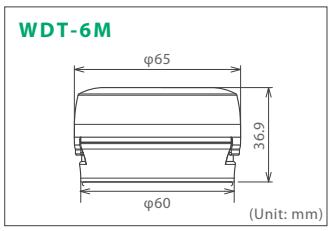


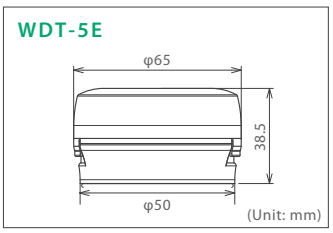




Courtesy of Steven Engineering, Inc. - (800) 258-9200 - sales@steveneng.com - www.stevenengineering.com

## Typical Applications

- Multiple stand-alone machines can be networked by the AirGrid for data archiving and remote monitoring.
- The status and condition of the machines are indicated by the PATLITE signal towers.

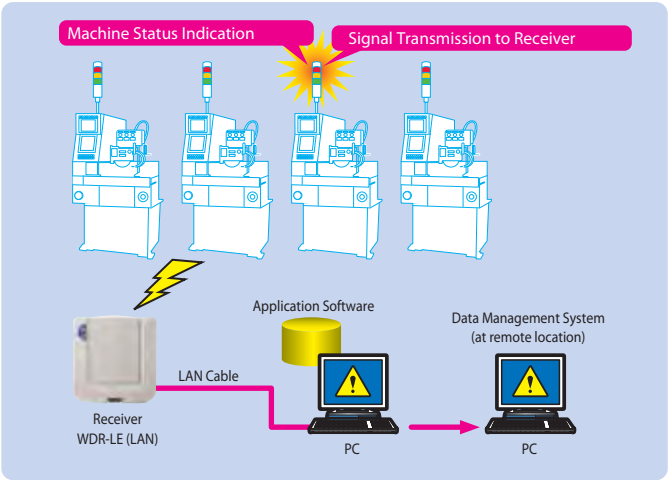


## Wireless Concept IEEE 802.15.4 2.4GHz

- Wireless hopping/routing functions and mesh topology can make flexible and reliable wireless network configurations possible.
- Data archived by the AirGRID is stored in a file format CSV which any off-the-shelf data management software e,g, SCADA can handle.

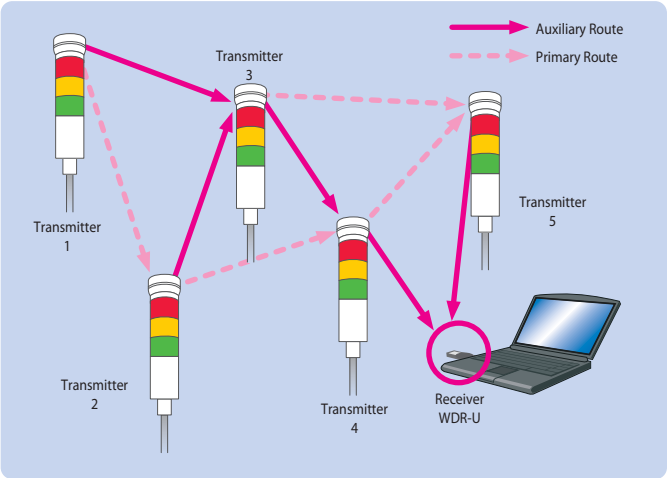


### Network Connection Condition

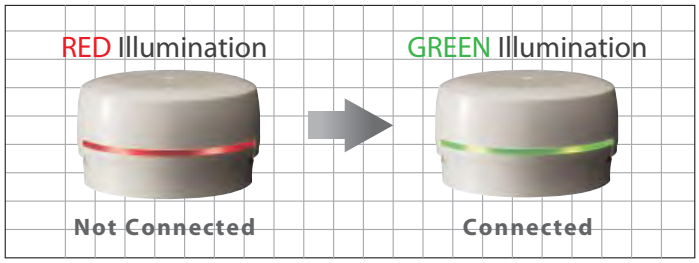


※ The transmitter is designed for PATLITE Model Series LME and LE Signal Towers. (As of Dec, 2012)

### Transmitter Installation

Affix the transmitter adaptor Ⓐ on the Signal Tower and fasten it with the center screw. Then simply attach the transmitter Ⓑ to the bracket. (Some applications don't require additional wiring.)

## Specifications

**Transmitters**

| Model | WDT-6M | WDT-5E |
|---|---|---|
| Applicable Signal Tower | Φ60 LME Series | Φ50 LE Series |
| Rated Voltage | DC 24V (No Polarity) | |
| Voltage Range | 20.4V - 26.4V DC | |
| Current Consumption | 35mA | |
| Operating Temperature | -10°C - +60°C (No Condensation) | |
| Storage Temperature | -20°C - +70°C (No Freezing) | |
| Relative Humidity | RH 85% or less | |
| Mounting Direction | Upright Position (Indoors Only) | |
| Protection Rating | Determined by PATLITE Signal Tower IP Ratings | |
| Dimensions (mm) | Φ65 x 36.9 | Φ65 x 38.5 |
| Mass | 55g | |

Ask your PATLITE Sales Representative for AirGrid compatable PATLITE Signal Towers

**Receiver**

| Model | WDR-LE (LAN/USB) |
|---|---|
| Rated Voltage | DC 24V (Power Supply not included) |
| Voltage Range | DC 20.4V - 26.4V |
| Current Consumption | 150mA |
| Operating Temperature | -10°C - +60°C (No Condensation) |
| Storage Temperature | -20°C - +70°C (No Freezing) |
| Relative Humidity | RH 85% or less |
| Mounting Direction | Horizontal, Wall-mount (Indoors Only) |
| Protection Rating | IP20 |
| Dimensions (mm) | 131(H)x125(W)x38.5(D) |
| Mass | 165g |

## Features

| | |
|---|---|
| Wireless Standard | IEEE 802.15.4 for Zigbee 2.4GHz |
| Frequency Bandwidth | 2,400MHz - 2,483.5MHz (16 Channels at 5MHz Step starting from 2,405MHz) |
| Networking Connections | up to 20 Units (*1) |
| Antenna Output | Maximum 1mW |
| Compliances | FCC, CD (R&TTE), RoHS |
| (*1) Number of possible Units to connect is based on the wireless environment and installation location | |

* This product operates on a frequency in compliance to FCC laws in the United States and its territories. Radio Laws for individual countries vary, and it is, therefore, the responsibility of the customer to comply with the laws in the country which applies to the application. Our company takes no responsibility directly, or indirectly, for claims from a customer or third party regarding Radio Laws or Wireless ordanance.
* This product requires application software for configuration and data acquisition. For more information on the latest software and solution to fit the application, please contact your nearest PATLITE Sales Representative indicated on the backside of this Catalog.



Courtesy of Steven Engineering, Inc. - (800) 258-9200 - sales@steveneng.com - www.stevenengineering.com

# NHL

## Network Monitor Signal Tower

RoHS CE

- LED
- 4 Alarm Sounds
- 80db at 1m
- Φ60
- Network

## Network Monitoring With a New Look

- Not dependent upon the OS.
- Supports common protocols such as HTTP, SMTP, SNMP and includes RSH.
- Easily works with NMS (network management/integration / monitoring) software, etc.
- Easily controllable by the SNMP SET command and RSH commands.
- Conforms to the CE requirements. (AC Adaptor does not carry the CE mark.)
- Four different alarm sounds can be correlated to match the prioritized monitoring level.
- Contains the ICMP protocol so PING monitoring can be set up for a maximum of 24 nodes.
- Using the IP Address of the NHL Tower, detailed setup functions can be accessed via a browser.

## How to Order

**NHL-3FB1□-RYG**

- Model
- Tiers: 3
- AC Adaptor: U: Included; N: Not Included
- Lens Color: R: Red; Y: Amber; G: Green; B: Blue; C: Clear/White (Top to bottom)

## Dimensions

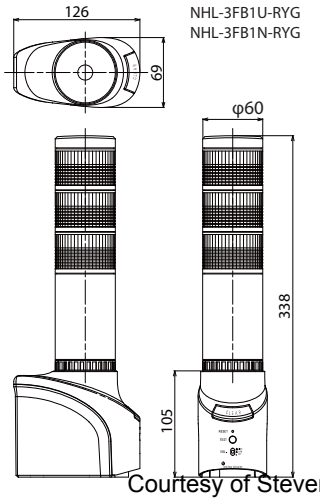

Upright Base
(Standard Item)

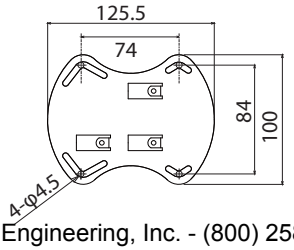


## Specifications

| Model | | NHL-3FB1U-RYG | | | | | | NHL-3FB1N-RYG |
|---|---|---|---|---|---|---|---|---|
| AC Adaptor | Rated Voltage | AC 100V to 240V | | | | | | - |
| | Operating Voltage Range | AC 90V to 264V | | | | | | - |
| Main Unit | Rated Voltage | DC 24V | | | | | | |
| | Power Consumption | Unit | Red | Amber | Green | Blue | White | Buzzer |
| | | 2.0W | 1.5W | 1.5W | 0.8W | 0.8W | 0.8W | 2.0W |
| Operating Temperature Range | | 0°C - +40°C | | | | | | |
| Storage Temperature Range | | -10°C - +60°C | | | | | | |
| Relative Humidity | | RH of 20 to 80% (No Condensation) | | | | | | |
| Vibration Resistance | | 19.6m/s² | | | | | | |
| Protection Rating | | IP20 (Not Waterproof) | | | | | | |
| Alarm Sound | Audio Level | Three-position switch for "HIGH", "LOW", "OFF"<br>"HIGH": 80dB or more "LOW": 70dB or less<br>(Tested at 1m from diaphram in upright position) | | | | | | |
| | Tone Pattern | Four distinctive patterns:<br>(Slow Intermittent), (Fast Intermittent),(Fast Burst), (Continuous) | | | | | | |
| Switches | "CLEAR" | Pushbutton Switch | | | | | | |
| | "TEST" | Pushbutton Switch | | | | | | |
| | "RESET" | Pushbutton Switch | | | | | | |
| | "BUZZER" | Slide Switch | | | | | | |
| Communication Method | Ethernet | Physical Layer: 10BASE-T/100BASE-TX<br>(Auto-negotiation/Full Duplex/ Half Duplex) | | | | | | |
| | | Data Link Layer: CSMA/CD | | | | | | |
| | | Network Link Layer: IP / ARP / ICMP | | | | | | |
| | | Transport Layer: TCP / UDP | | | | | | |
| | | Application Layer: HTTP / RSH / SMTP / SNTP / POP / DNS / NTP / DHCP / Socket | | | | | | |
| Mounting | Location | Indoors Only | | | | | | |
| | Direction | Desktop or Wall-mount in the Upright Position | | | | | | |
| Mass (AC Adaptor not included) | | 800g | | | | | | |
| Accessories | | AC Adaptor, Rubber Feet, Adhesive Tape, Support Base | | | | | | Rubber Feet, Adhesive Tape, Support Base |



Courtesy of Steven Engineering, Inc. - (800) 258-9200 - sales@steveneng.com - www.stevenengineering.com

# Easy Integration for many system applications

## PING Device Monitor

### Monitors Device Existence on the Network

The NH Tower initiates PING interaction with network devices to verify existence of up to 24 nodes. When the response to a PING fails, a warning with light and sound occurs to alert administrators.

Among the 24 nodes, 12 nodes (13th - 24th) can be set up for more detailed monitoring parameters.

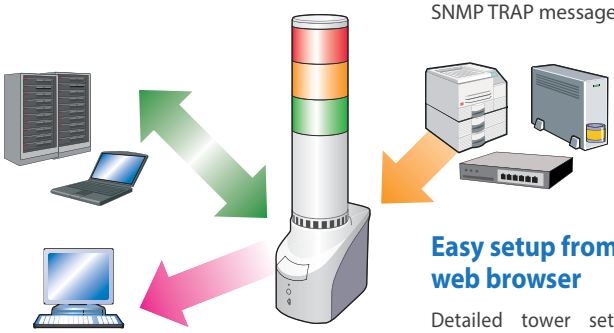

## Application Monitor

The tower can monitor important background applications and signal the administrator upon any failure.

## SNMP v1·v2c

### Monitor networking equipment at a low cost

Many network devices (UPS, printers, routers, switches, etc.) generate SNMP TRAP messages when a failure occurs. The NHL tower can trigger a light and sound signal based on these SNMP TRAP messages to alert the administrator.

It can distinguish the various TRAPS. Register up to 16 groups (4 nodes per group).

### Easy setup from a web browser

Detailed tower setup is accessed from a web browser directly to its IP Address. Firmware can also be upgraded remotely.

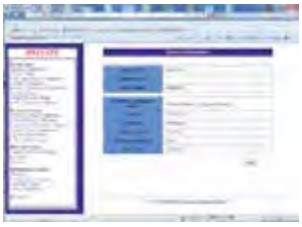

Web Setup Screen

# Communication Commands for many customized applications

## RSH

The RSH protocol is flexible with easily controllable commands.
With the use of Network integrated management software; event information obtained from various monitoring tools etc., can be used as a trigger to cause a combination of flashing and alarm patterns to sound in synchronicity with the event.

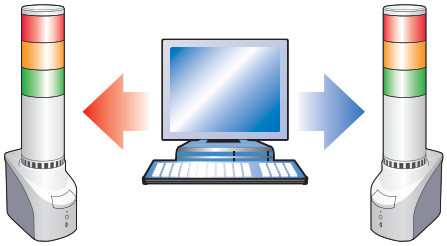

**Event Occurence: Command Tier to light, alarm to sound.**
RSH Example Code: rsh 192.168.10.1 -l root alert 111001

## SOCKET Transmission

### PHN Command Compatibility

Controlled with 2 byte commands.

* Compatible with NHE-3FB, NHC-3FB, NHM-3FB, and PHN-3FBE1.
* Some functionality is limited.

**Event Occurence:**
**Command Tier to light, alarm to sound**
PHN Example Code: 0x57,0x17

### New PNS Command Compatibility

The PNS command can be used to control all pattern information.

*** The PNS command is a unique command from PATLITE.**

**Event Occurence: Command Tier to sound alarm**
PNS Example Code:
0x58,0x58,0x53,0x00,0x00,0x06,0x01,0x01,0x01,0x00,0x00,0x01

# Diagnostic / Reporting/ Notification Features

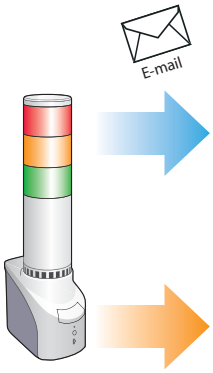


## E-mail Transmission

### Send e-mail with a maximum of eight selectable events

Up to eight events can be created and sent as a secure e-mail with the subject name and text corresponding to the event.

## SNMP v2c

### SNMP TRAP Transmission

Can transmit from a maximum of eight network devices.

## Self-diagnosis

The test switch on the front of the Body can check the Signal Tower and alarm operation functions easily without it being controlled through the network.

# Options

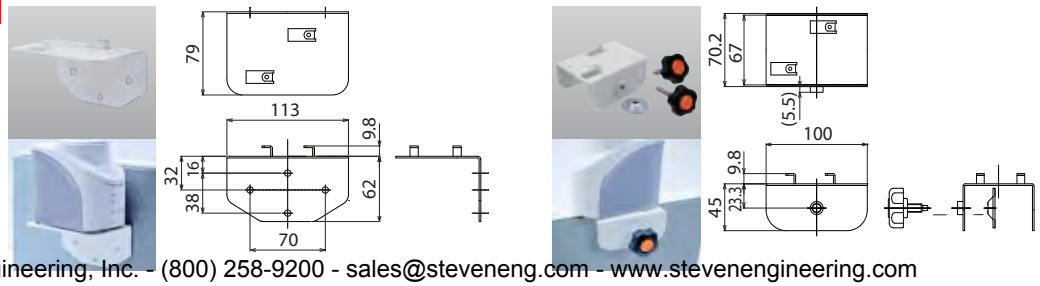

# LE-K3 / WEP-K3

CompoNet Supported

LED

2 Alarm Sounds (LE)

90db at 1m

1 Alarm Sound (WEP)

85db at 1m

IP23

Network

## DeviceNet Supported Signal Tower for Open-field Network

FEATURES

- Single cable uses CompoNet cable only, which transfers power and signals for control.
- Easy connection directly to 64 linkable CompoNet units with DeviceNet cable, without I/O terminals.
- Requires a CompoNet controller (i.e. CompoNet Master).
- Address Data Storage setting with the internal DIP switch.
- Light Pattern is continuous only, no flashing available.
- Built-in alarm for B-type models such as; LE: 85dB at 1m (adjustable), WEP: 90dB at 1m.
- Sound Patterns available are; LE: Intermittent tone, Alarm 1: short beep, Alarm 2: long beep. WEP: 1 alarm, continuous tone only.
- Models include interchangeable modules*, no re-wiring necessary, even after installation (except for WEP type).

*Refer to the standard models for details.

DIRECT MOUNT

### LE-K3W
### LE-K3BW

POLE MOUNT

### LE-K3P
### LE-K3BP

- PATLITE's exclusive Prism-Cut Lens designed for enhanced visibility from any direction and distance.
- Original Dual Reflection System for enhanced light diffusion; creating bright, distinctive illumination while saving energy.
- Direct or pole mount installation.
- Main body is constructed of ABS resin with superior resistance to impact and heat.
- Lens is made of superior impact resistant and light translucent AS resin.

### WEP-K3
### WEP-K3B

- Clear vertical-cut lens for enhanced illumination over a wide perspective.
- Installation can be vertical and horizontal (Alarm type must have buzzer installed face-down).
- Lens made of superior impact and heat resistant polycarbonate resin for superior durability and enhanced illumination.



Courtesy of Steven Engineering, Inc. - (800) 258-9200 - sales@steveneng.com - www.stevenengineering.com

## Application Example

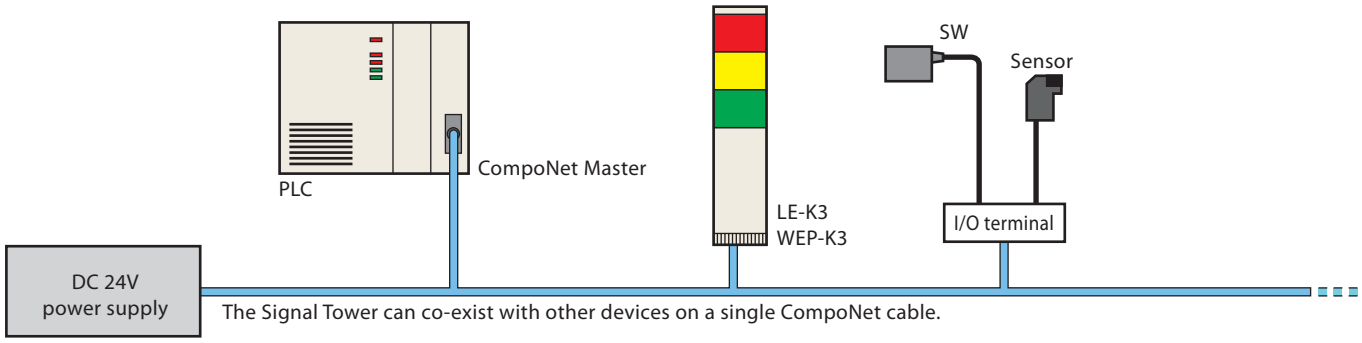


## Dimensions

LE-K3

Direct mount

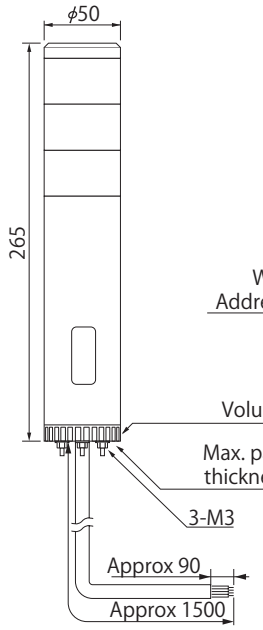


Pole mount

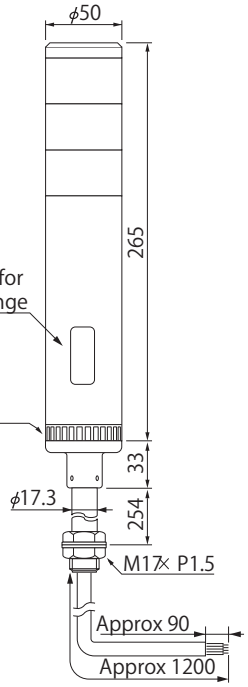


WEP-K3

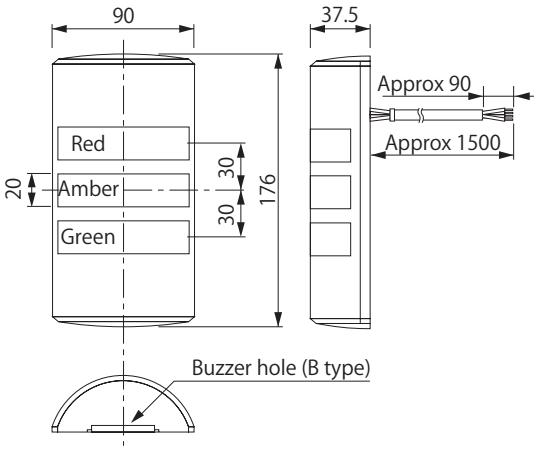


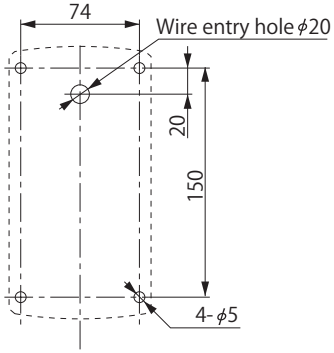


Mounting Dimension

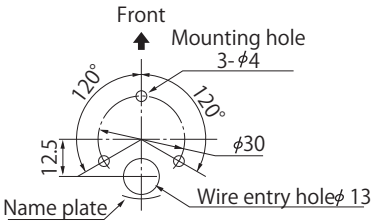


Side-Mount Bracket

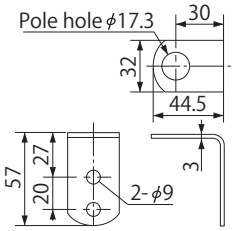


(Unit: mm)

| Wire Color | Signal |
|---|---|
| BROWN | BS+ (24VDC) |
| BLACK | BS- (0V) |
| WHITE | BDH (H) Line |
| BLUE | BDL (L) Line |

## Specifications

| Series | Stack Number | Model | Audible Alarm Option | Signal Line | Power Line | Current Consumption | | | |
|---|---|---|---|---|---|---|---|---|---|
| | | | | | | CompoNet PCB (Max) | LED Unit (Max) | | Audible Alarm |
| LE | 3 Tiers | LE-K3W/LE-K3P | N/A | BDH BDL | BS+ (24VDC) BS- (0V) | 60mA | 25mA (Red, Amber) | 20mA (Green) | N/A |
| | | LE-K3BW/LE-K3BP | Available | | | | | | 40mA |
| WEP | | WEP-K3 | N/A | | | | 30mA (Red, Amber) | 25mA (Green) | N/A |
| | | WEP-K3B | Available | | | | | | 40mA |



Courtesy of Steven Engineering, Inc. - (800) 258-9200 - sales@steveneng.com - www.stevenengineering.com

# LHE-C3/LE-C3/WEP-C3

## CC-Link Supported

CC-Link

LED

2 Alarm Sounds (LHE/LE)

90db at 1m

1 Alarm Sound (WEP)

85db at 1m

IP23

Network

## CC-Link supported Signal Tower for Open-field Network

FEATURES

- Single cable uses CompoNet cable only, which transfers power and signals for control.
- Easy connection directly to 64 linkable CompoNet units with DeviceNet cable, without I/O terminals.
- Requires a CompoNet controller (i.e. CompoNet Master).
- Address Data Storage setting with the internal DIP switch.
- Light Pattern is continuous only, no flashing available.
- Built-in alarm for B-type models such as; LHE: 90dB at 1m (adjustable), LE: 85dB at 1m (adjustable), WEP: 90dB at 1m.
- Sound Patterns available are; LHE / LE: Intermittent tone, Alarm 1: short beep, Alarm 2: long beep. WEP: 1 alarm, continuous tone only.
- Models include interchangeable modules*, no re-wiring necessary, even after installation (except for WEP type).

*Refer to the standard models for details.

### LHE-C3
### LHE-C3B

- Original LED reflection system to improve brightness and provide maintenance-free operation.
- Direct mount installation is standard; pole-mount is available with the optional mounting pole.
- Lens is made of superior impact and heat resistant AS resin for superior durability and light transmission.

DIRECT MOUNT

### LE-C3W
### LE-C3BW

POLE MOUNT

### LE-C3P
### LE-C3BP

- PATLITE's exclusive Prism-Cut Lens designed for enhanced visibility from any direction and distance.
- Original Dual Reflection System for enhanced light diffusion; creating bright, distinctive illumination while saving energy.
- Direct or pole mount installation.
- Main body is constructed of ABS resin with superior resistance to impact and heat.
- Lens is made of superior impact resistant and light translucent AS resin.

### WEP-C3
### WEP-C3B

- Clear vertical-cut lens for enhanced illumination over a wide perspective.
- Installation can be vertical and horizontal (Alarm type must have buzzer installed face-down).
- Lens made of superior impact and heat resistant polycarbonate resin for superior durability and enhanced illumination.



Courtesy of Steven Engineering, Inc. - (800) 258-9200 - sales@steveneng.com - www.stevenengineering.com

## Application Example

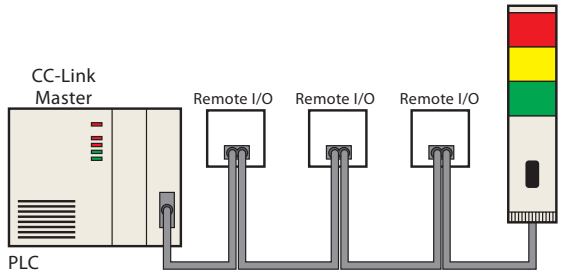


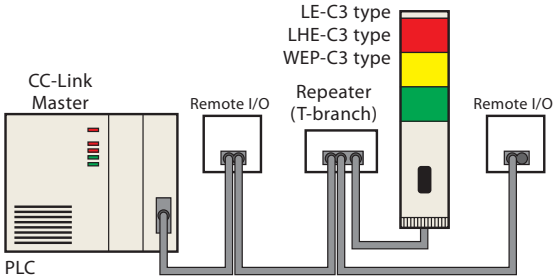


CC-Link Signal Towers without Terminal Resistors can be branched via terminal blocks when Repeaters are not used.

## Dimensions

LHE-C3
LHE-CT3

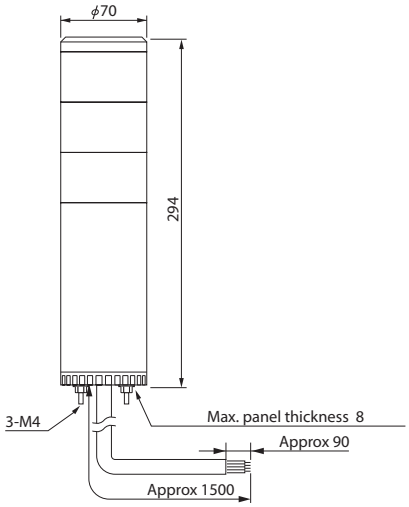


LE-C3
LE-CT3

Direct mount

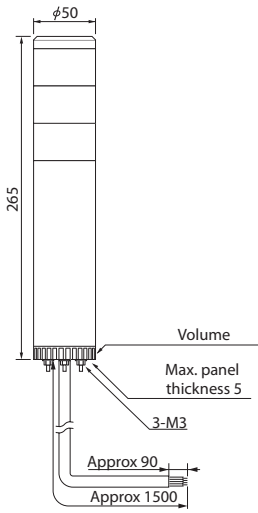


Pole mount

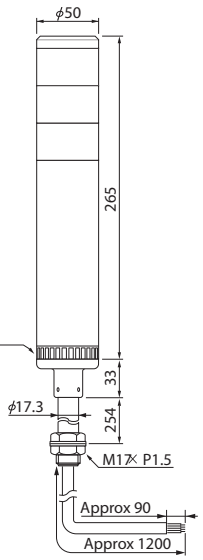


WEP-C3
WEP-CT3

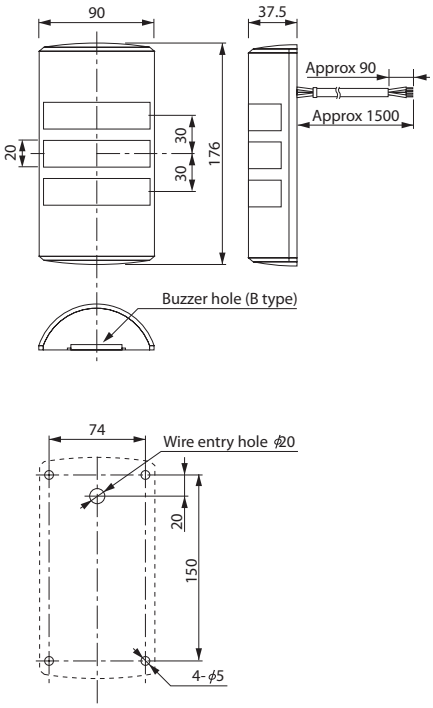


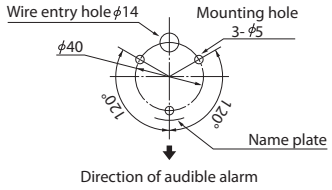


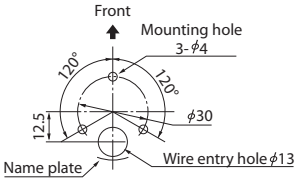


Side-Mount Bracket

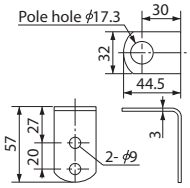


(Unit: mm)

C3: Without Terminal Resistor
CT3: With Terminal Resistor

| Wire Color | Signal |
|---|---|
| BLUE | DA |
| WHITE | DB |
| YELLOW | DG |
| (NONE) | SLD |

## Specifications

| Series | Stack Number | Model | Audible Alarm Option | Signal Line | Current Consumption | | | |
|---|---|---|---|---|---|---|---|---|
| | | | | | CC-Link PCB (Max) | LED Unit (Max) | | Audible Alarm |
| LHE | 3 Tiers | LHE-C(T)3 | N/A | DA, B, DG, SDL | 50mA | 50mA (Red, Amber) | 40mA (Green) | N/A |
| | | LHE-C(T)3B | Available | | | | | 40mA |
| LE | | LE-C(T)3W/LE-C(T)3P | N/A | | | 50mA (Red, Amber) | 40mA (Green) | N/A |
| | | LE-C(T)3BW/LE-C(T)3BP | Available | | | | | 40mA |
| WEP | | WEP-C(T)3 | N/A | | | 30mA (Red, Amber) | 25mA (Green) | N/A |
| | | WEP-C(T)3B | Available | | | | | 40mA |



Courtesy of Steven Engineering, Inc. - (800) 258-9200 - sales@steveneng.com - www.stevenengineering.com

# PHE-3FBE1

## RS-232C / PC Controlled Signal Tower

RoHS

LED

2 Alarm Sounds

85dB at 1m

Φ40

Network

• This product requres the knowledge to program with ASCII commands to output through an RS-232C port.

## Signal Tower can be controlled directly by PC through RS-232C.

FEATURES

- Alarm is adjustable up to 85dB at 1m
- High-volume alarms (two patterns) can be heard even in a noisy factory.
- Bright LED signal tower
- PATLITE's original double reflection system with its exclusive hybrid prism-cut lens and 3 color LED modules create distinctive illumination that is bright and even.
- Light and alarm functions can be turned off by pressing the reset switch on the base.

## Dimensions

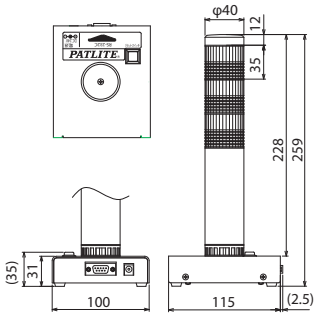


(Unit: mm)

## Specifications

| Model | | PHE-3FBE1 |
|---|---|---|
| Communication Protocol | Interface | RS-232C (Based on EIA) |
| | Method | Half-duplex, Full-duplex, Asynchronous |
| | Baud Rate | 9,600 bps |
| | Data Bit | 8 bit |
| | Stop Bit | 1 bit |
| | Parity Bit | None |
| | Flow Control | None |
| | I/O Port | D-sub 9 pin Male Connector |
| Signal Tower Specifications | Flashing Rate | 60 flashes per minute |
| | Sound Level | Adjustable from 70dB to 85dB (at 1m) |
| | Tone Pattern | 2 Alarms (Slow Intermittent, Fast Intermittent) |
| PHE Base Specifications | Dimensions (mm) | 100(W) x 259(H) x 115(D) |
| | Power Supply Source | AC Adaptor (Sold Separately) |
| | Power Consumption | 6.5W |
| | Operating Temperature Range | 0°C to +40°C |
| | Humidity | 20 to 80% RH (No Condensation) |

### PHE-3FBE1 / PHC-100A Control

■ASCII Command String

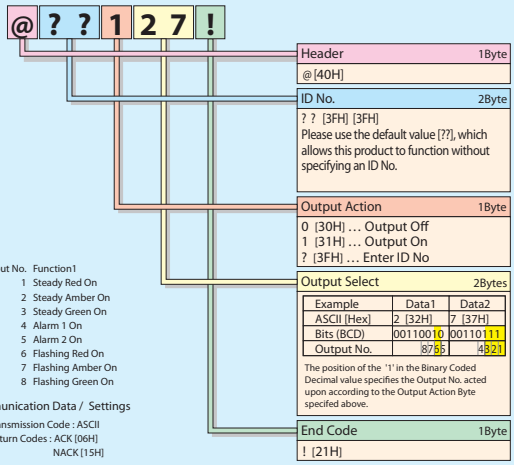


● The above example shows how to turn on the following output numbers : 6, 3, 2, 1



Courtesy of Steven Engineering, Inc. - (800) 258-9200 - sales@steveneng.com - www.stevenengineering.com

# PHC-100A

## Interface Converter

Network

Terminal

• This product requres the knowledge to program with ASCII commands to output through an RS-232C port.

The PHC-100A Interface Converter can be connected to the RS-232C port on your programmed PC to control most PATLITE products, both visual and audible.

• 16 terminals provide 8 isolated non-voltage contact outputs.
• Reset pushbutton provided to reset all outputs to the off state.

## Dimensions

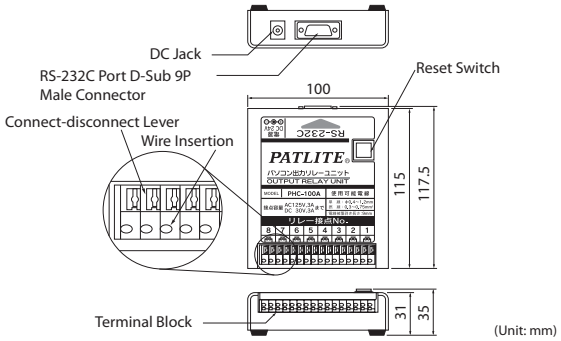


●Basic Connections

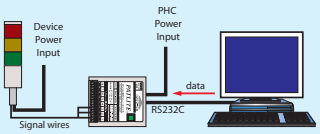


●Application Examples

Transfer data to turn on relay circuit 1 from PC.

Data @??101!

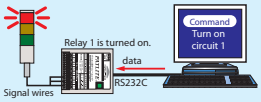


Transfer data to turn on relay circuit 2 from PC.

Data @??102!

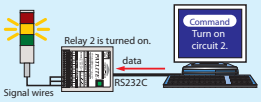


Transfer data to turn on relay circuits 2 and 3 from PC.

Data @??106!

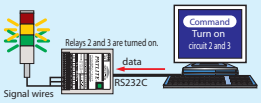


## Specifications

| Model | | PHC-100A |
|---|---|---|
| Communication Protocol | Interface | RS-232C (Based on EIA) |
| | Method | Half-duplex, Full-duplex, Asynchronous |
| | Baud Rate | 9,600 bps |
| | Data Bit | 8 bit |
| | Stop Bit | 1 bit |
| | Parity Bit | None |
| | Flow Control | None |
| | I/O Port | D-sub 9 pin Male Connector |
| PHC Base Terminal Buss Specifications | Contact Type | Non-voltage Contact |
| | Contact Outputs | 8 |
| | Output Load Capacity | AC 125V 3A / DC 30V 3A |
| | Connector | Screwless Terminal |
| | Applicable Wire Size | Solid Wire: AWG18 - 26 (0.4 - 1.2mm$^2$)<br>Stranded Wire: AWG20 - 22 (0.3 - 0.75mm$^2$) |
| PHE Base Specifications | Dimensions (mm) | 100(W) x 31(H) x 115(D) |
| | Power Supply Source | AC Adaptor (Sold Separately) |
| | Power Consumption | 4.0W |
| | Operating Temperature Range | 0°C to +40°C |
| | Humidity | 20 to 80% RH (No Condensation) |



Courtesy of Steven Engineering, Inc. - (800) 258-9200 - sales@steveneng.com - www.stevenengineering.com

# PHU-3

## USB / PC Controlled Signal Tower

RoHS

LED

Φ25

IP20

Network

Signal Tower can be controlled directly by PC through the USB Port.

### FEATURES

- Bright LED available as RYG or RYB three-tiered Signal Tower.
- PATLITE's original double reflection system with its exclusive hybrid prism-cut lens and 3 color LED modules create distinctive illumination that is bright and even.
- Power source supplied by USB Buss Power.

## How to Order

**PHU-3-RYG**

Tiers
3: 3 Tiers

Color
RYG: (Red, Amber, Green)
RYB: (Red, Amber, Blue)
(Top to bottom)

## Specifications

| Model | | PHU-3-RYG | PHU-3-RYB |
|---|---|---|---|
| General | Rated Voltage | 5V DC (USB Buss Power) | |
| | Operating Voltage Range | DC 4.4V to DC 5.25V | |
| | Rated Current Consumption (Power Source) | Standby Mode: 25mA<br>Operating Mode: 230mA Max. | |
| | Operating Temperature Range | -10°C to +55°C | |
| | Relative Ambient Temperature | RH 90% or less (No Condensation) | |
| | Electric Noise Intensity Level | VCCI Class-B Equivalent | |
| Signal Tower | Installation | Upright Position Only | |
| | Protection Rating | IP20 | |
| | Insulation Resistance | More than 1MΩ at DC500V between the terminals and Chassis | |
| | Withstand Voltage | AC 500V applied for 1 minute between the terminals and chassis without breaking insulation. | |
| | Mass | 0.18kg | |
| Interface | Input / Output | Input: USB / Output: Llghting (Red, Amber, Green, Blue LED) | |
| | Physical Specifications | Connector Input: Series-B Receptacle (USB Rev. 1.1 Compliant) | |



Courtesy of Steven Engineering, Inc. - (800) 258-9200 - sales@steveneng.com - www.stevenengineering.com

## Dimensions

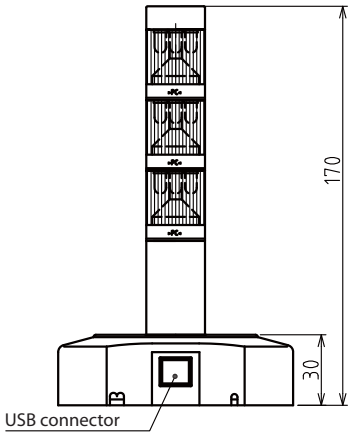


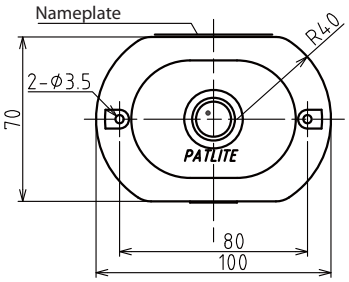


(Unit: mm)

Example) PHU-3-RYG controlling Red and Green LED lights (*1)

| Logic Specifications | Action | Bit Data |
|---|---|---|
| | "Red" Light On | 0000 0001 |
| | "Amber" Light On | 0000 0010 |
| | "Green" Light On | 0000 0100 |
| | "Blue" Light On | 0000 1000 |
| | "Red", "Amber" Light On; "Green", "Blue" Light Off | 0000 0011 |
| | "Red", "Green" Light On; "Amber" , "Blue" Light Off | 0000 0101 |
| | "Amber", "Green" Light On; "Red", "Blue" Light Off | 0000 0110 |
| | "Amber", "Blue" Light On; "Red", "Green" Light Off | 0000 1010 |
| | "Red", "Amber", "Green", "Blue" Light On | 0000 1111 |
| | "Red", "Amber", "Green", "Blue" Light Off | 0000 0000 |

| | |
|---|---|
| Transfer Mode | Bulk Transfer |
| Data Error Detection Criteria | CRC (Cyclic Redundancy Check) |
| Packet Commands | Token Packet (SOF, SETUP, OUT, IN) |
| | Data Packet |
| | Handshake Packet |

| Transmission Setting (Virtual COM) | | |
|---|---|---|
| Bit Rate | : | 19,200bps |
| Data Length | : | 8 bits |
| Parity | : | None |
| Stop Bit | : | 1 bit |
| Control Flow | : | None |

| HEX | 0 | | | | 5 | | | |
|---|---|---|---|---|---|---|---|---|
| Binary | 0 | 0 | 0 | 0 | 0 | 1 | 0 | 1 |

Not Used

Blue LED 0: Off /1: On

Green LED 0: Off /1: On

Amber LED 0: Off /1: On

Red LED 0: Off /1: On

*2 *3

*1 Drivers for Windows OS may have to be installed prior to use. Refer to the Instruction Manual on how to get the latest downloads.

*2 This product does not include a Flashing function but it can be controlled by programming it through the USB output.

*3 The control commands for the Green LED and Blue LED for the PHU-3-RYG and PHU-3-RYB are controlled seperately.

- This Unit is designed to be controlled by one computer, improper operation may occur with two or more units connected.



Courtesy of Steven Engineering, Inc. - (800) 258-9200 - sales@steveneng.com - www.stevenengineering.com

# VE25 / VE100

## Real-time Production Monitoring Solution

RoHS

LED

Terminal

25mm/100mm

Network

VE25-304SU
3 Row, 4 Digit Type
Digit Size : 25mm

VE100-304SU
3 Row, 4 Digit Type
Digit Size : 100mm

VE-IRU
Infrared Remote Control Unit
(Sold Separately)

* Compliant with FCC Title 47 Part 15 Subpart B

- Improve Manufacturing Productivity
- Reduce Down Time for "Kaizen"
- Ideal for Lean Manufacturing
- Real-time Production Monitoring
- Large Digital Displays
- Easy Installation

Our VE Series Real-time Production Monitoring Solution serves as a rugged, factory floor Andon system, with real-time production status indication to alert product performance to workers and supervisors. The VE Series Real-time Production Monitoring Solution is easy to install directly on operator workstations or automated machinery, and the wireless remote control unit enables easy setup. The VE Series Real-time Production Monitoring Solution comes in 2 models (25mm or 100mm character height), and it fully supports the principles of "Kaizen" (continuous improvement) to achieve a "Visual Factory", where clear and easy to understand information is quickly accessible.

### FEATURES

- Available in 25mm and 100mm digit sizes.
- Production-control settings can easily be set-up with the remote control or PC (Sold Seperately).
- Bright LED digits for easy viewing.
- External terminal output for adding an extra 3 color LED Signal Tower to add distinctive signaling.

- Easy Setup

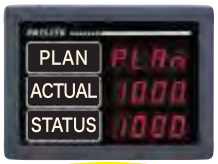


Plan

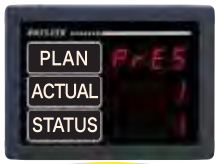


Prescale

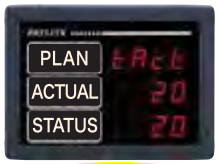


Takt-time

- Three-terminal Output

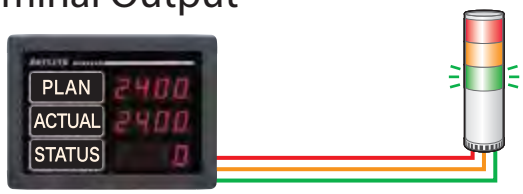


Progress Loss
Red Light

Progress Gain
Amber Light Flash

Goal
Green Light Flash

- Optional Bracket for VE-100 Available

VE-100 Brackets
(Set of 2, Sold Separately)



Courtesy of Steven Engineering, Inc. - (800) 258-9200 - sales@steveneng.com - www.stevenengineering.com

## Serial Network Application

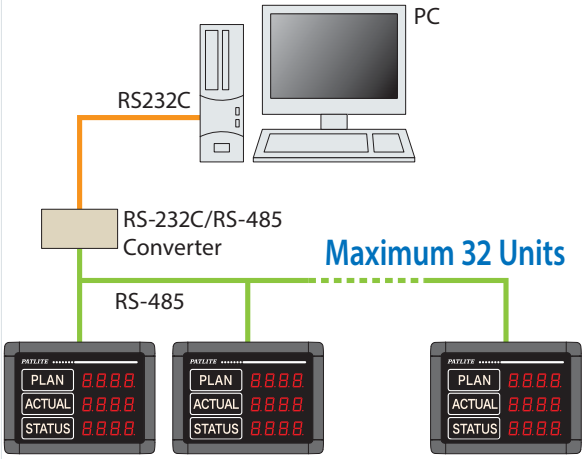


## Stand-alone Application

**Output Devices**

- Beacons
- Audible Alarms
- Annunciators

**Input Devices**

- Manual Switches
- Micro Switches
- Relays
- RS485 Converters

## Dimensions

**Model VE25-304SU**

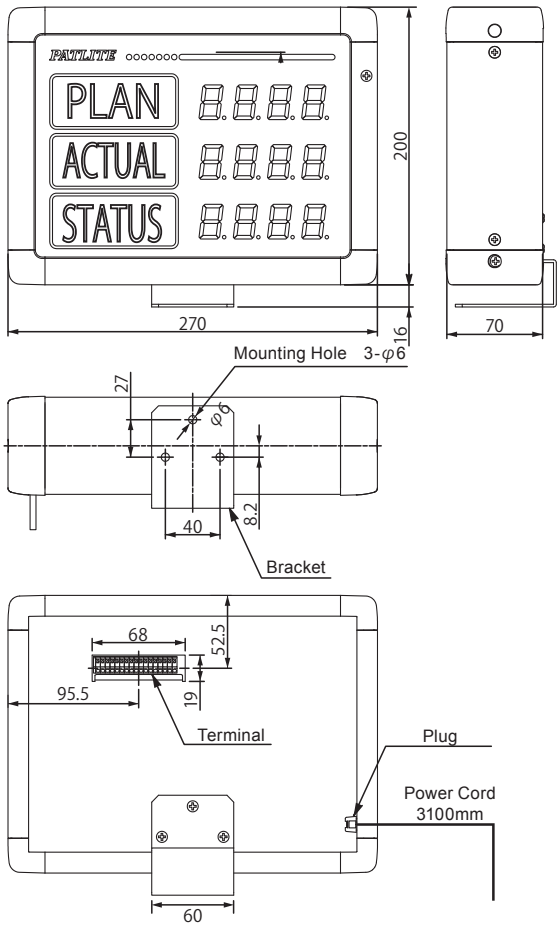


**Model VE100-304SU**

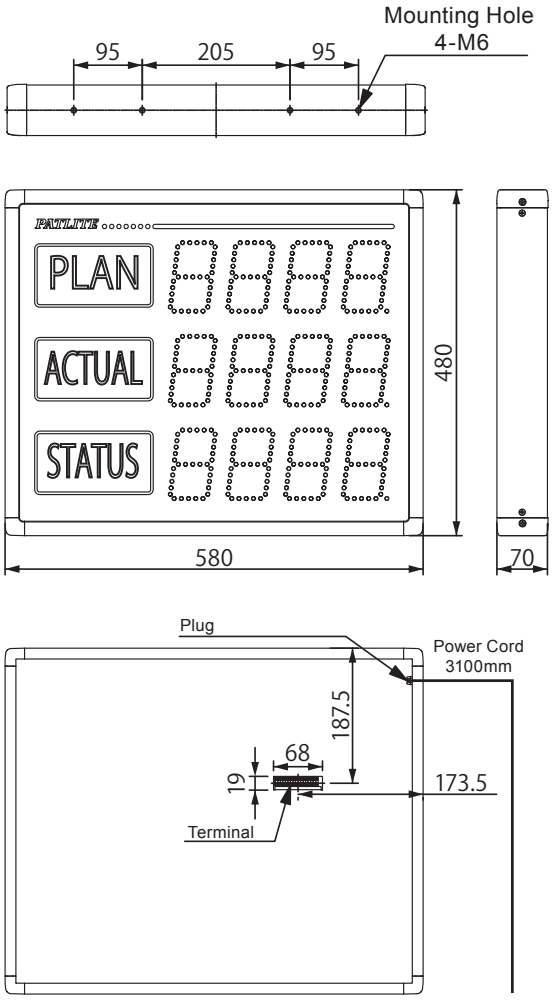


(Unit: mm)



Courtesy of Steven Engineering, Inc. - (800) 258-9200 - sales@steveneng.com - www.stevenengineering.com

MEMO

For more details, visit our website at http://www.patlite.com

Courtesy of Steven Engineering, Inc. - (800) 258-9200 - sales@steveneng.com - www.stevenengineering.com

# Explosion-Safe Products

# EDLM / EDWM

## Explosion-Safe Signal Tower

ATEX & FM

CENELEC Standards

Testing Authority
NEC Article 505

**LED**

**IP66**

**Explosion-Safe**

**NPN/PNP Open-collector**

EDWM EDLM

Wall Mount

Horizontal Mount

Direct Mount

FEATURES

- Complies with with CE according to ATEX and NEC 505 standards.
- Mounting can be done in the Upright, Wall-mount, and Horizontal position
- Voltages available in AC/DC24V, AC120V, AC230V, and free voltage of AC90 -250V
- Easy wire connection terminals to the Signal Tower by opening the bottom
- Different lens colors available for customized designs
- Available in 3 Tier or 5 Tier Stacks
- Ingress protection of IP66

## Innovative maintenance-free Explosion-safe LED Signal Towers with pressure and flame-proof housing, ideal for potentially flammable and hazardously explosive environments.

| ■ CENELEC (ATEX Directive) | | | | | |
|---|---|---|---|---|---|
| Type | EDLM-302FE | EDLM-312FE | EDLM-323FE | EDWM-502FE | EDWM-5M2FE |
| Rated Voltage | AC/DC24V | AC 120V | AC 230V | AC/DC 24V | AC 90V - 250V |
| Signal Line Current (Per LED) | Red/Amber: 52.5mA Green: 20.0mA | | | Red: 22.6mA Amber: 26.6mA Green: 17.5mA Blue/White: 38.9mA | |
| Explosion Protection Ratings | Ex II2G Ex d IIC T6 (Zone 1,2) Ex II2D EX tD A21 IP66 T80°C (Zone 21, 22) | | | | |
| Operating Temperature Range | -20°C - +50°C (no ice) | | | | |
| Operating Humidity Range | 45% - 85% RH (No dew or condensation) | | | | |
| Ambient Pressure Range | 80 - 110kpa | | | | |
| Lighting Pattern | Flashing (60 ±12 flashes per minute) / Continuous Lighting | | | | |
| Protection rating | IP66 | | | | |
| Vibration Reistance | 9.8m/s² | | | | |
| Mounting | Outdoor & Indoor: Upright | | | Outdoor & Indoor: Upright and Sideways | |
| Luminosity | Red: 350mcd Amber: 580mcd Green: 1300mcd | | | Red/ Amber/ Green: 1000mcd Blue/White: 300mcd | |
| Mass (Main Body) | 4.3kg | | | 4.7kg | |
| Material | Upper/Lower Housing: Aluminum Alloy (Melamine Baked Finish)<br>Glass Case: Borosilicate Glass<br>Fitting Bracket: Stainless Steel (SUS316)<br>Cable Gland: Brass | | | | |

| ■ CENELEC (ATEX Directive) | | | | | |
|---|---|---|---|---|---|
| Type | EDLM-302FA | EDLM-312FA | EDLM-323FA | EDWM-502FA | EDWM-5M2FA |
| Rated Voltage | AC/DC24V | AC 120V | AC 230V | AC/DC 24V | AC 90V - 250V |
| Signal Line Current (Per LED) | Red/Amber: 52.5mA Green: 20.0mA | | | Red: 22.6mA Amber: 26.6mA Green: 17.5mA Blue/White: 38.9mA | |
| Explosion Protection Ratings | Ex II2G Ex d IIC T6 (Zone 1,2) Ex II2D EX tD A21 IP66 T80°C (Zone 21, 22) | | | | |
| Operating Temperature Range | -20°C - +50°C (no ice) | | | | |
| Operating Humidity Range | 45% - 85% RH (No dew or condensation) | | | | |
| Ambient Pressure Range | 80 - 110kpa | | | | |
| Lighting Pattern | Flashing (60 ±12 flashes per minute) / Continuous Lighting | | | | |
| Protection rating | IP66 | | | | |
| Vibration Reistance | 9.8m/s² | | | | |
| Mounting | Outdoor & Indoor: Upright | | | Outdoor & Indoor: Upright and Sideways | |
| Luminosity | Red: 350mcd Amber: 580mcd Green: 1300mcd | | | Red/ Amber/ Green: 1000mcd Blue/White: 300mcd | |
| Mass (Main Body) | 4.3kg | | | 4.7kg | |
| Material | Upper/Lower Housing: Aluminum Alloy (Melamine Baked Finish)<br>Glass Case: Borosilicate Glass<br>Fitting Bracket: Stainless Steel (SUS316)<br>Cable Gland: Brass | | | | |



Courtesy of Steven Engineering, Inc. - (800) 258-9200 - sales@steveneng.com - www.stevenengineering.com

## EDLM & EDWM are covered by the specifications shown in the **shaded** areas below:

Common Standards for Europe

- The ATEX directive is a CENELEC Standard

| Classification | Standard | PATLITE Models | Constant Exposure | Occasional Exposure | Rare & Temporary |
|---|---|---|---|---|---|
| ATEX, IEC/EU Directive 94/9/EC | IEC 60079-10 EN 60079-10 | EDLM, EDWM | Zone 0 | Zone 1 | Zone 2 |

Common Standards for the USA

- NEC is a National Electrical Code Standard for North America

| Classification | Standard | PATLITE Models | Constant Exposure | Occasional Exposure | Rare & Temporary |
|---|---|---|---|---|---|
| NEC Article 505 | ANSI/NFPA 71 | EDLM, EDWM | Zone 0 | Zone 1 | Zone 2 |
| NEC Article 500 | ANSI/NFPA 70 | — | Division 1 | | Division 2 |

# Dimensions

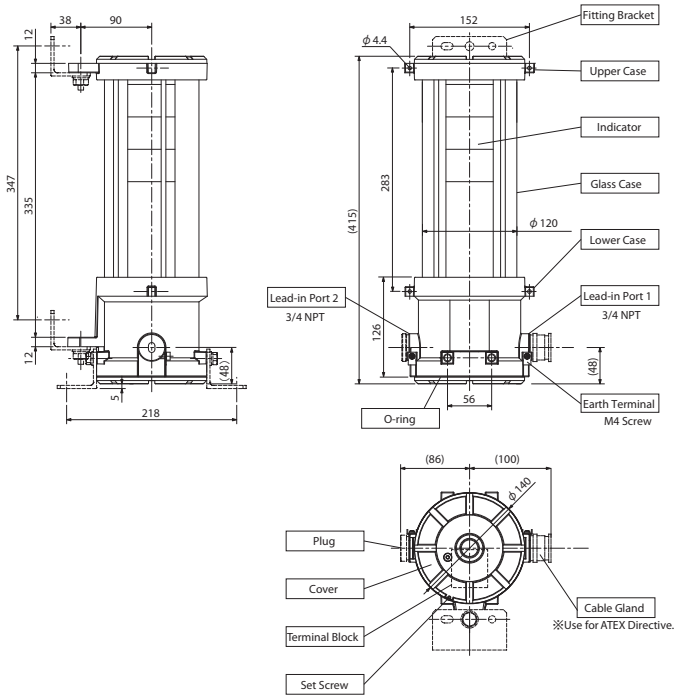


■ Installation (Wall-mount)

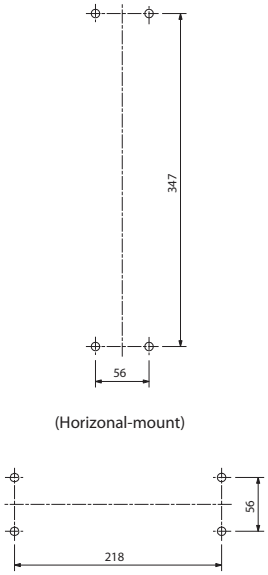


■ Cable Gland*

3/4 NPT

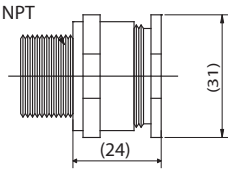


*ATEX Model ... Included
*NEC Model ..... Not Included

■ Flush-mount Bracket

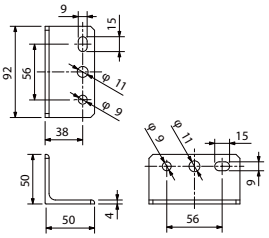


(Unit: mm)

# Wiring

## EDLM (3 Color LED)

- **EDLM-302FE/ EDLM-302FA**

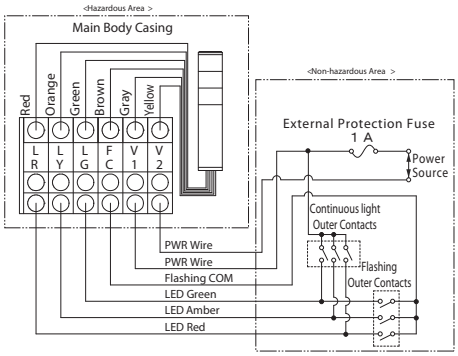


- **EDLM-312FE/ EDLM-312FA**
  **EDLM-323FE/ EDLM-323FA**

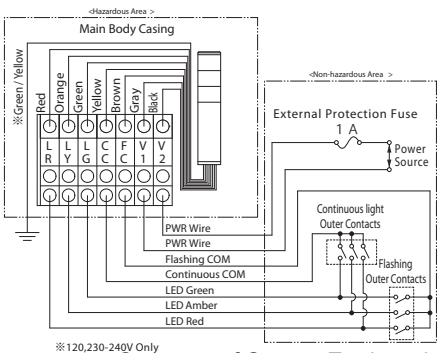


## EDWM (5 Color LED)

- **EDWM-502FE/ EDWM-502FA**

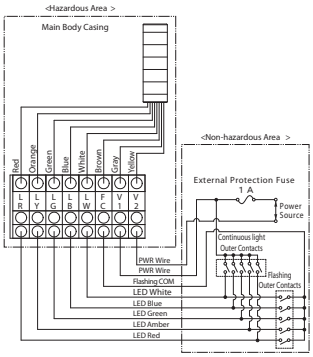


- **EDWM-5M2FE/ EDWM-5M2FA**

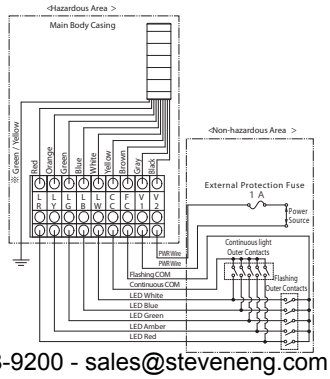


**External Protection Fuse (All Models): 250V 1A**



Courtesy of Steven Engineering, Inc. - (800) 258-9200 - sales@steveneng.com - www.stevenengineering.com

# AR-070

CE Ex II 3GD Ex nA IIC T4 Gc, Ex tc IIIC T85°C Dc IP65 94/9/EC (ATEX) CENELEC: EN 60079-0, EN 60079-15, EN 60079-31

## Explosion-Safe Signal Tower

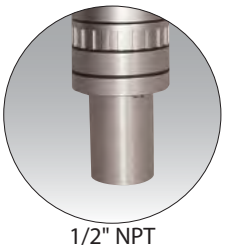

1/2" NPT
*1/2 NPT Adaptor also available

Side-mount Bracket

**LED**

**85db at 1m**

**IP65 (IP54 with Buzzer)**

**Explosion-Safe**

**Φ40**

FEATURES

- Explosion-Safe for gas and dust
- Suitable for Zone 2 and Zone 22
- CE Compliance in accordance to ATEX
- Full and brilliant lumination
- LED double reflection lighting system
- Different lens colors available
- Stackable from 1 to 5 tiers
- Wall mount or direct mount
- Ingress protection of IP65 (IP54 with buzzer)
- Available with "flashing/ non-flashing" and two audible alarm sounds

## Explosion-Safe Signal Tower

φ40mm with sealed cable

## Dimensions

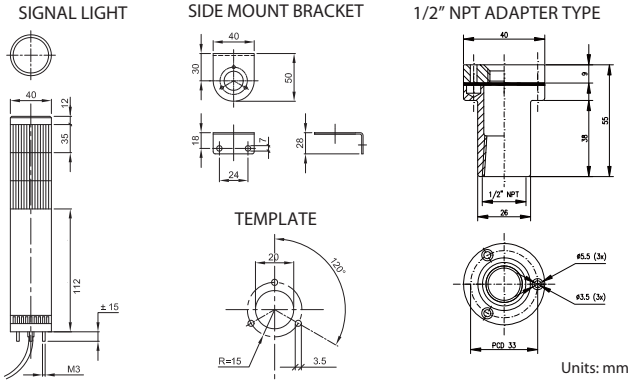


## Specifications

| | |
|---|---|
| Explosion-safety | CE Ex II3 GD; Ex nA IIC T4 Gc: Ex tc IIIC T85°C Dc IP65 |
| CE Conformities | EN 60079-0, EN 60079-15, EN 60079-31 |
| Certification | EC Declaration of Conformity |
| Ambient Temperature | -30°C - +60°C |
| Ingress Protection | IP65 to EN 60529 |
| Material | ABS Tower Body |
| Lighting Source | Multiple LED's with Double Reflection System |
| Acoustical Source | Buzzer with two different tones: 85dB (at 1m) |
| Rated Voltage | AC/DC 24V |
| Assembly Position | As Desired |
| Activation Time | 100% |
| Module Colors Available | Red, Amber, Green, Blue, Clear/White |
| Cable | Factory sealed cable, φ8mm, length 3 meters |

| CURRENT RATINGS | | | |
|---|---|---|---|
| LED | | BUZZER | |
| Signal Line Current | | Signal Line Current | Inrush Current |
| Red, Amber | Green, Blue, Clear | | |
| ab. 30mA | ab. 25mA | ab. 40mA | ab. 250mA |

## Wiring

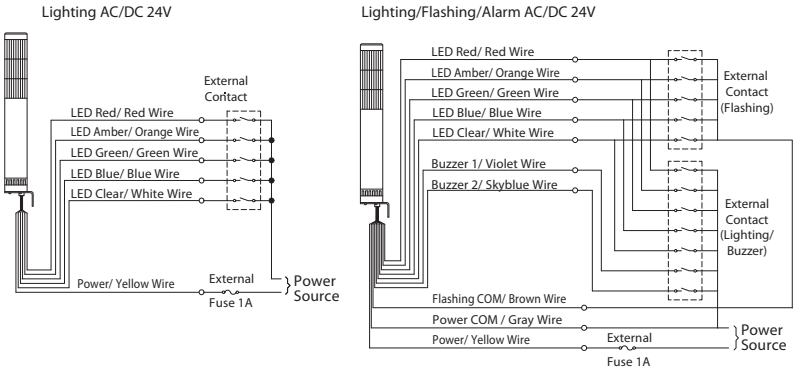


## How to Order

**AR-070-0 □ 1 / □ □ -RYGBC**

Model Code
1 : Continuous Light
2 : Flashing/ Alarm

Rated Voltage
1: AC/DC 24V

Tiers
1: 1 Tier
2: 2 Tiers
3: 3 Tiers
4: 4 Tiers
5: 5 Tiers

Bracket Code
Blank : L Type
N : NPT Type

LED Color
R: Red
Y: Amber
G: Green
B: Blue
C: Clear/White
(From top to bottom)

※ AC type available by special order.



Courtesy of Steven Engineering, Inc. - (800) 258-9200 - sales@steveneng.com - www.stevenengineering.com

# AR-078

CE Ex II 3GD Ex nA IIC T4 Gc, Ex tc IIIC T85°C Dc IP65 94/9/EC (ATEX) CENELEC: EN 60079-0, EN 60079-15, EN 60079-31

## Explosion-safe Signal Tower

Side-mount Bracket

3/4" NPT
*3/4 NPT Adaptor also available

FEATURES

- Explosion-Safe for gas and dust
- Suitable for Zone 2 and Zone 22
- CE Compliance in accordance to ATEX
- Full and brilliant lumination
- LED double reflection lighting system
- Different lens colors available
- Stackable from 1 to 5 tiers
- Wall mount or direct mount
- Ingress protection of IP65 (IP54 with buzzer)
- Available with "flashing/ non-flashing" and two audible alarm sounds

LED

90db at 1m

IP65 (IP54 with Buzzer)

Explosion-Safe

Φ60

## Explosion-Safe Signal Tower
φ60mm with sealed cable

## Dimensions

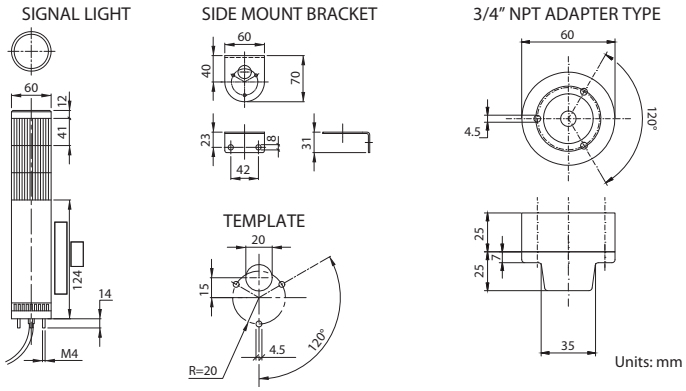


## Specifications

| | |
|---|---|
| Explosion-safety | CE Ex II3 GD; Ex nA IIC T4 Gc: Ex tc IIIC T85°C Dc IP65 |
| CE Conformities | EN 60079-0, EN 60079-15, EN 60079-31 |
| Certification | EC Declaration of Conformity |
| Ambient Temperature | -30°C - +60°C |
| Ingress Protection | IP65 to EN 60529 |
| Material | ABS Tower Body |
| Lighting Source | Multiple LED's with Double Reflection System |
| Acoustical Source | Buzzer with two different tones: 90dB (at 1m) |
| Rated Voltage | AC/DC 24V |
| Assembly Position | As Desired |
| Activation Time | 100% |
| Module Colors Available | Red, Amber, Green, Blue, Clear/White |
| Cable | Factory sealed cable, φ8mm, lenght 3 meters |

| CURRENT RATINGS | | | |
|---|---|---|---|
| LED | | BUZZER | |
| Signal Line Current | | Signal Line Current | Inrush Current |
| Red, Amber | Green, Blue, Clear | | |
| ab. 30mA | ab. 25mA | ab. 40mA | ab. 250mA |

## Wiring

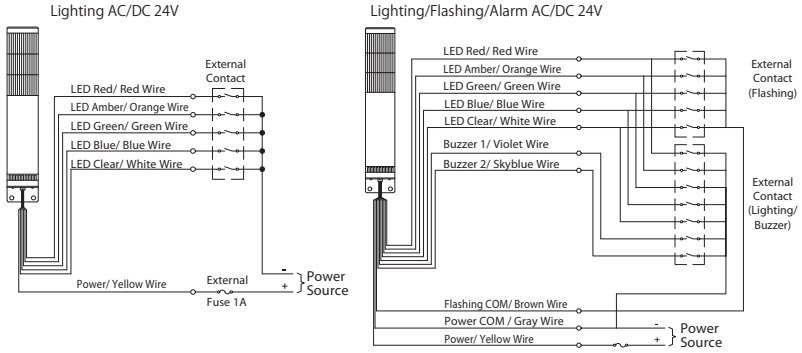


## How to Order

**AR-078-0 □ 1 / □ □ -RYGBC**

Model Code
1 : Continuous Light
2 : Flashing/ Alarm

Voltage Code
1: AC/DC 24V

Tier Code
1: 1 Tier
2: 2 Tiers
3: 3 Tiers
4: 4 Tiers
5: 5 Tiers

Bracket Code
Blank : L Type
N : NPT Type

LED Color Code
R: Red
Y: Amber
G: Green
B: Blue
C: Clear/White
(From top to bottom)

※ AC type available by special order.



Courtesy of Steven Engineering, Inc. - (800) 258-9200 - sales@steveneng.com - www.stevenengineering.com

# LKEH-EX

CE Ex II 3GD Ex nA IIC T4 Gc, Ex tc IIIB T85°C Dc IP54 94/9/EC (ATEX) CENELEC: EN 60079-0, EN 60079-15, EN 60079-31

## Explosion-Safe LED Hybrid Signal Tower

**LED**

**32 Channels (Binary)**

**63 Seconds**

**105 db at 1m**

**Explosion-Safe**

FEATURES

- Explosion-Safe for gas and dust
- Suitable for Zone 2 and Zone 22
- CE Compliance in accordance to ATEX
- LED brightness is visible from a far distance with a big 100mm diameter module
- Super-bright LED colors corresponding to different voice, alarm, chimes and melody sounds.
- Voice alert messages of up to 63 seconds (64kbit/sec) with 5 channels for playback.
- 32 different melody, chime sound combinations are pre-recorded
- 8 sounds can be played back with bit input, or 32 sounds with binary input
- Stackable from 1 to 4 tiers
- Adjustable volume from 0 to 105dB (at 1m)
- MP3 model is field-programmable, using an SD Card for model LKEH-FV-EX
- Robust design able to withstand vibrations of up to 2G.
- Body is made of Acrylonitrite-Ethylene-Styrene for weather resistance
- One common wire can easily control both LED Units and audible signals
- NPN open-collector connection is standard, PNP is available upon request

LKEH-FV-EX, LKEH-FE-EX

## Dimensions

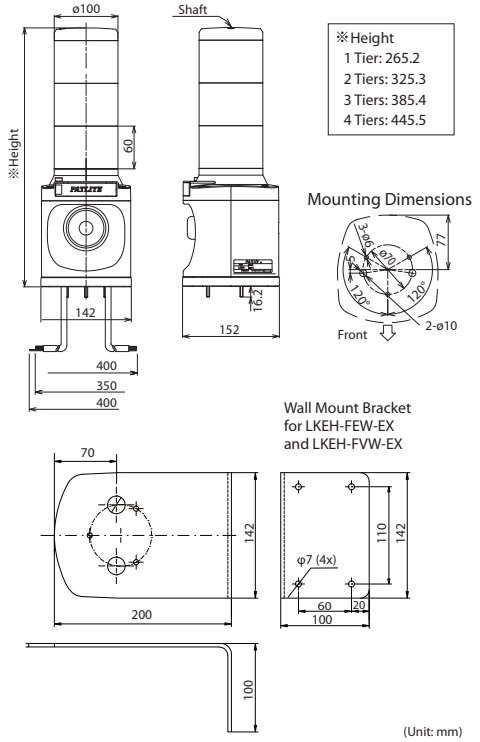


※Height
1 Tier: 265.2
2 Tiers: 325.3
3 Tiers: 385.4
4 Tiers: 445.5

## How to Order

**LKEH-302FVF-RYG-EX**

Model

Tiers
1~4

Type
FV: Voice Synthesizer
FE: 32 Sounds

Mounting
F: Flush-mount
W: Wall-mount

Color
R: Red
Y: Amber
G: Green
B: Blue
C: Clear/White
(Top to Bottom)

| Model | MP3 | Power |
|---|---|---|
| LKEH-FEF-EX/LKEH-FEW-EX | — | 14.2W |
| LKEH-FVF-EX/LKEH-FVW-EX | Supports | 14.2W |

SD Card (SDV-128) for models LKEH-FVF-EX and LKEH-FVW-EX is sold separately.

### Sound Selection Chart

| | | | |
|---|---|---|---|
| Beep (slow intermittent) | Stutter + Bell | Inverted Reveille | Annie Laurie |
| Stutter (rapid intermittent) | Melody Chime | Galactic Motor | London Bridge is falling down |
| Bell (clear high-pitch) | Chime | Ringing Phone | Mary had a little Lamb |
| Yelp (rapid siren) | Call Sign | Two Tone | Camptown Races |
| Rapid Hi-Lo | Train Ride | Alarm Clock | Amaryllis |
| Melody Chime | Galloping Hi-Lo | Ringing Hi-Lo | Mozart Symphony No. 40 |
| Synthesized Piano | Alien Chatter | Fur Elise | Ave Maria |
| Synthesized Bell | Falling Crystals | Bach Minuet in Gmaj | Grandfather's Clock |

## Specifications

| Model | Rated Voltage | MP3, Melody | Operating Temperature Range | Recordable Duration | Mounting Brackets | Channels | Mass |
|---|---|---|---|---|---|---|---|
| LKEH-FEF-EX | DC 24V | Type-E | -10°C to +50°C 85% RH or less | Pre-recorded | Flush-mount | 8ch bit input, 32ch binary input | 2.8kg |
| LKEH-FEW-EX | | Type-E | | | Wall-mount | 8ch bit input, 32ch binary input | 3.2kg |
| LKEH-FVF-EX | | MPEG1-Audio Layer III, 64kbit/s | | 63 seconds | Flush-mount | 5ch bit input, 32ch binary input | 2.8kg |
| LKEH-FVW-EX | | MPEG1-Audio Layer III, 64kbit/s | | | Wall-mount | 5ch bit input, 32ch binary input | 3.2kg |

• The mass is based on a 3-tiered LED Model LKEH. The mass will change in accordance to the number of tiers.



Courtesy of Steven Engineering, Inc. - (800) 258-9200 - sales@steveneng.com - www.stevenengineering.com

# EHS-EX/EHV-EX

CE Ex II 3GD Ex nA IIC T4 Gc, Ex tc IIIC T85°C Dc IP65 94/9/EC (ATEX) CENELEC: EN 60079-0, EN 60079-15, EN 60079-31

## Explosion-Safe Melody/Alarm Horn

RoHS

EHV 63 Channels (Binary)

110 dB at 1m (EHS)

IP65

Explosion-Safe

FEATURES

- Protection Rating of IP65.
- Explosion-Safe for gas and dust
- Suitable for Zone 2 and Zone 22
- CE Compliance in accordance to ATEX
- EHS-EX comes with 32 preloaded melody and alarm sounds with adjustable volume up to 110dB (@ 1m).
- Robust, indoor and outdoor use with vibration resistance up to 4.5G.
- EHV-EX comes with 63 preloaded crisp and clear melody and alarm sounds with adjustable volume up to 110dB (@ 1m).
- EHV-EX offers a field-programmable MP3 function with a maximum of 220 sec. of recording time (@ 64bps) and an adjustable volume up to 105dB (@ 1m).
- Ideal for plant-wide notification, public address and process control.
- UL464, CSA-C22.2 NO.205-M1983, FCC Part 15 Subpart B Class 4.
- CE, RoHS Compliant (EHS-M1 and EHV-M1 Only).

## Dimensions

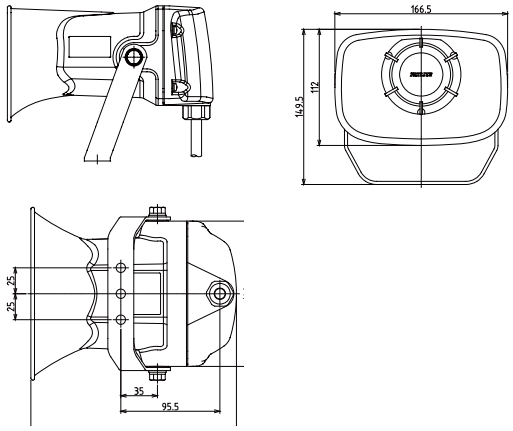


## Wiring

- Non-voltage (NPN) Wiring

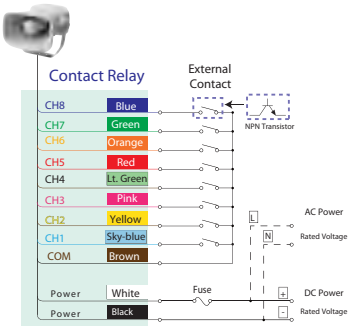


- PNP Wiring

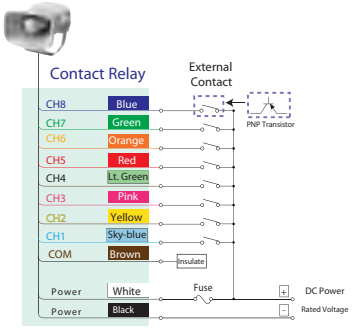


- Terminal (NPN)

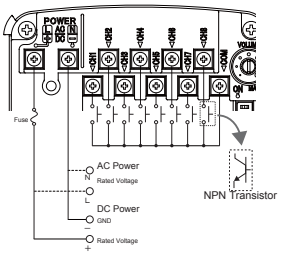


- Terminal (PNP)

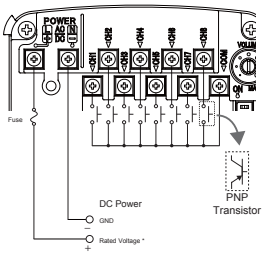


## How to Order

**EH□- M1□□- EX**

Model
- V: MP3 Alert Horn
- S: Melody/Alarm Horn

Melody/Alarm Type
- E: Type E (EHS)
- G: Type G (EHV)

Wiring Type
- H: Cable
- T : Terminal

## Specifications

| Model | Rated Voltage | Voltage Range | Power Consumption | Rated Current Consumption | Sound Pressure (max) | Operating Temperature Range | No. of Playback Messages | Protection Rating | Wiring Type | Mass |
|---|---|---|---|---|---|---|---|---|---|---|
| EHS- M1H | DC 12 - 24V | DC 10.8V to 26.4V | 4W (at DC24V) | 450mA (max) | Alarm: 110dB (at 1m) | -20°C to +50°C (Less than 85% RH) | Bit Input: 8 Binary Input: 32 | IP65 | Cable | 1.25kg |
| EHS- M1T | | | | | | | | | Terminal | |
| EHV- M1H | DC 12 - 24V | DC 10.8V to 26.4V | 4W (at DC24V) | 400mA (max) | Alarm: 110dB (at 1m) MP3: 105dB (at 1m) | -20°C to +50°C (Less than 85% RH) | Bit Input: 8 Binary Input: 63 | IP65 | Cable | 1.25kg |
| EHV- M1T | | | | | | | | | Terminal | |

Note 1: The sound pressure level is based on measurements under controlled conditions (voice-synthesized 1 kHz sine wave played back from a distance of 1 meter), therefore the surrounding environmental conditions and message content will result in different values for the sound pressure level.

Note 2: Even when starting two or more units simultaneously, a lag will occur during message playback.

Courtesy of Steven Engineering, Inc. - (800) 258-9200 - sales@steveneng.com - www.stevenengineering.com

# CLN-EX

CE Ex II 3GD Ex nA IIC T4 Gc, Ex tc IIIC T135°C Dc IP65 94/9/EC (ATEX) CENELEC: EN 60079-0, EN 60079-15, EN 60079-31

## Explosion-Safe LED Work Light

RoHS CE Ex

CLN-24-CD-PT-EX

**Daylight**

**IP66G/67G/69K**

**Explosion-Safe**

FEATURES

- 820 lx brightness
- 60,000 hrs., or about 7 years of long service life (*1)
- IP66G, IP67G, IP69K protection (*2)
- Low current draw of 174mA
- DC 24V (Polarized)
- Wide operating temperature range (-40 to +60°C)
- IEC62471 Compliance (Photobiological Safety Standard)
- Daylight Color Temperature (6,500K), suitable for very detailed work
- Made of aluminum alloy and tempered glass, is resistant to water, oil and coolants
- Includes a flexible stainless-steel angle bracket to adapt to various scenarios (*3)
- Compact, light-weight, durable design (Thickness:22.2mm x Width: 85mm x Height: 128mm)

*1 : The typical value of LED brightness is 70% of the original specification, but may vary depending on actual applications.
*2 : IP66G and IP67G are Japanese Industrial Standards (JIS C0920-2003), and IP69K is the German DIN 40050 PART9 Standard.
*3 : CLN-24-CD-PT-EX Work Light can only be installed where risk of mechanical danger is limited to 2 Joules of impact energy.

## Dimensions

- **Pan/Tilt Type (PT Type)**

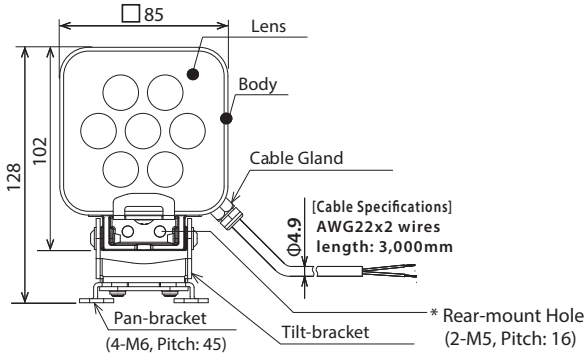


## How to Order

**CLN-24-CD-PT-EX**

Movable Type
T : Tilt
PT : Pan/Tilt

## Specifications

| | | |
|---|---|---|
| Model | | CLN-24-CD-PT-EX |
| Color Code (Color) | | CD (Daylight) |
| Color Temperature (typ.) | | 6500K |
| Illumination (typ.) (Centered at DC 24V) | 1m | 820 lx |
| Total Luminous Flux (typ.) | | 550 lm |
| Rated Voltage | | DC 24V (Polarized) |
| Operating Voltage Range | | DC 24V ±10% |
| Rated Consumption Current/Power Dissipation | | 174mA ±10% / 4.2W |
| Operating Ambient Temperature | | -40°C to +60°C (90% RH, no condensation) |
| Main Unit Material | | Body: Aluminum Alloy Lens: Tempered Glass |
| Protection Rating | | IP66G/67G (JIS C 0920)/69K (DIN 40050 part 9) (excluding cable ends) |
| Mounting Location/Direction | | Indoor / Any Direction |
| Insulation Resistance | | DC 500V 5MΩ or more between power input and metallic part |
| Withstand Voltage | | 500VAC for 1 minute between power input and chassis |
| Vibration Resistance | | 30Hz total amplitude 0.3mm$^{p-p}$ (Back and forth, up and down, left and right for 2 hrs each) total amplitude 0.3mm$^{p-p}$ (10-57Hz), Acceleration 19.6m/s$^2$ |
| Mass (Tolerance ±10%) | | 430g |



Courtesy of Steven Engineering, Inc. - (800) 258-9200 - sales@steveneng.com - www.stevenengineering.com

# CLK-EX

CE Ⓔx II 3GD Ex nA IIC T4 Gc, Ex tc IIIC T135°C Dc IP65 94/9/EC (ATEX) CENELEC: EN 60079-0, EN 60079-15, EN 60079-31

## Explosion-Safe LED Work Light

CLK6C-24AG-CD-EX

CLK3S-24AG-CD-EX

Daylight
Natural White

IP66G/67G/69K

Explosion-Safe

FEATURES

- Aluminum Housing
- Tempered glass lens
- IP66G/67G/69K ratings
- Explosion-safe for gas and dust
- Suitable for Zone 2 and Zone 22
- Temperature Range of -40°C to +60°C
- CE Compliance in accordance to ATEX
- 1,200 lx (3S/3C) and 2,100 lx (6S) brightness
- Outdoor installation allows Upright installation only
- LED Color Temperatures of 6,500K (CD) and 5,000K (CN)
- Stainless Steel Housing (available for 350mm long models)
- 250mm length (2S, 350mm length (3S/3C), 650mm length (6S) available

## Dimensions

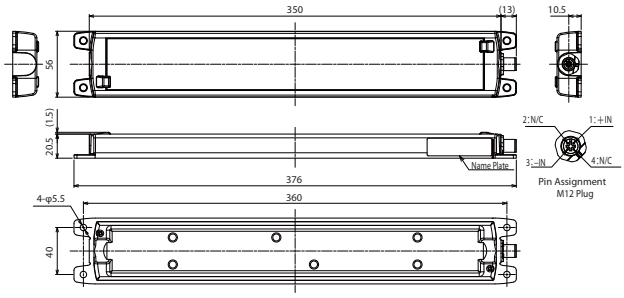


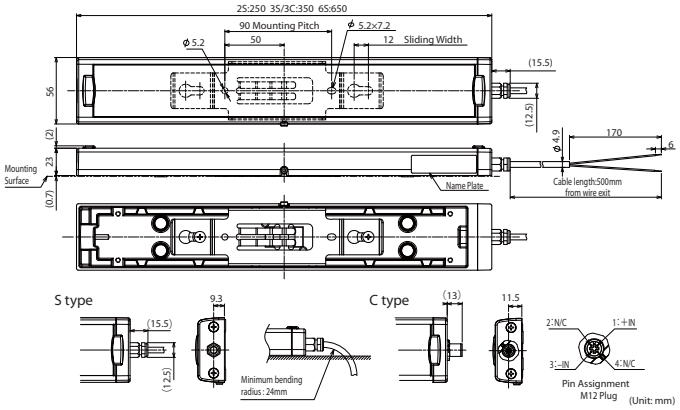


## How to Order

CLK-□□-24□-□-EX

Model

Illumination Area Size
2: 200mm 3: 300mm 6: 600mm

Wiring Specifications
S: Side-exiting Cable C: M12 Quick Disconnect

Color
CD: Daylight
CN: Natural White

Body & Lens
AG: Aluminum & Glass
SG: Stainless Steel & Glass

## Specifications

| | |
|---|---|
| Model | CLK- [ ] [ ] -24- [ ] [ ] - [ ] -EX |
| Color Code (Color) | Natural White (CN) / Daylight (CD) |
| Rated Voltage | DC 24V |
| Operating Voltage Range | DC 24V ±10% |
| Rated Consumption Current | 522mA ±40mA (3S / 3C Type) |
| Light Source | High intensity LED x 18 elements (3S / 3C Type) |
| Luminous Intensity at Optical Center (lx at 1m) | 1200 (3S / 3C Type) |
| Main Unit Material | Body: Aluminum Alloy or Stainless Steel Lens: Tempered Glass |
| Operating Temperature Range | -40°C to +60°C (90% RH, no condensation) |
| Mounting Location/Direction | Indoor / Any Direction |
| Protection Rating | IP66G/67G (JIS C 0920)/69K (DIN 40050 part 9) (excluding cable ends) |
| Vibration Resistance | 19.6m/s² |
| Mass (Tolerance ±10%) | 1.49kg |

*1 : The LED Work Light can only be installed in places where risk of mechanical danger is limited to an impact energy of 2 Joules. (1kg mass dropped at a 20cm height)

Courtesy of Steven Engineering, Inc. - (800) 258-9200 - sales@steveneng.com - www.stevenengineering.com

# CLA-EX

CE Ex II 3GD Ex nA IIC T4 Gc, Ex tc IIIC T135°C Dc IP65 94/9/EC (ATEX) CENELEC: EN 60079-0, EN 60079-15, EN 60079-31

## Explosion-Safe LED Work Light

RoHS CE Ex ECOLAB

Daylight
Natural White

IP66/67/69K

Explosion-Safe

FEATURES

- Explosion-safe for gas and dust
- Suitable for Zone 2 and Zone 22
- CE Compliance in accordance to ATEX
- DC 24V (Polarized, ±10%)
- Cable length: 3 meters
- IP66/67/69K ratings
- Body made of Polycarbonate Resin
- Polycarbonate mounting brackets available
- Lenghts available are; 100mm (140 lx), 200mm (270 lx), 300mm (400 lx), 600mm (650 lx), 900mm (810 lx), 1,200mm (890 lx), 1,500mm (945 lx)
- Temperature Range of -40°C to +60°C (RH 90% or less, no condensation)

## Dimensions

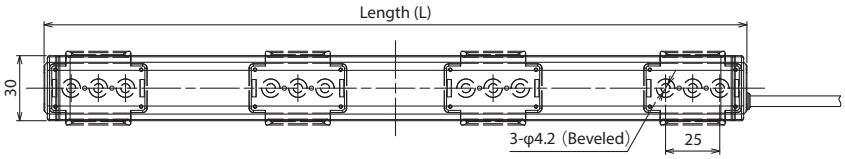


(Unit: mm)

## How to Order

**CLA□S-24-□-30-EX**

LED Color
- CD: Daylight (6800K)
- CN: Natural White (4800K)

Length (L)

| | | |
|---|---|---|
| 1: 100mm | 6: 600mm | 15: 1,500mm |
| 2: 200mm | 9: 900mm | |
| 3: 300mm | 12: 1,200mm | |

## Specifications

| Model | Luminous Color | Length | Rated Voltage | Rated Current Consumption | Center Radiation (lx/50cm) | Mounting Direction | Vibration Resistance | Mass |
|---|---|---|---|---|---|---|---|---|
| CLA1S -24-CD-EX | Daylight | 100mm | DC 24V (Polarized) | 104mA | 140 lx | Any Direction (Indoors Only) | 19.6m/s² | 80g |
| CLA1S -24-CN-EX | Natural White | | | | | | | |
| CLA2S -24-CD-EX | Daylight | 200mm | | 208mA | 270 lx | | | 130g |
| CLA2S -24-CN-EX | Natural White | | | | | | | |
| CLA3S -24-CD-EX | Daylight | 300mm | | 240mA | 400 lx | | | 180g |
| CLA3S -24-CN-EX | Natural White | | | | | | | |
| CLA6S -24-CD-EX | Daylight | 600mm | | 480mA | 650 lx | | | 340g |
| CLA6S -24-CN-EX | Natural White | | | | | | | |
| CLA9S -24-CD-EX | Daylight | 900mm | | 720mA | 810 lx | | | 500g |
| CLA9S -24-CN-EX | Natural White | | | | | | | |
| CLA12S -24-CD-EX | Daylight | 1200mm | | 960mA | 890 lx | | | 660g |
| CLA12S -24-CN-EX | Natural White | | | | | | | |
| CLA15S -24-CD-EX | Daylight | 1500mm | | 1,200mA | 945 lx | | | 820g |
| CLA15S -24-CN-EX | Natural White | | | | | | | |



Courtesy of Steven Engineering, Inc. - (800) 258-9200 - sales@steveneng.com - www.stevenengineering.com

# RES-A

TIIS Exd IIB+H2T6

## Explosion-Safe Revolving Warning Light

Bulb

Φ224

IP65

Explosion-Safe

## Robust Heavy Duty Revolving Warning Light.

FEATURES

- φ224mm Diameter.
- Rotating parabolic reflector to enhance visibility from a distance.
- Upright, inverted, and sideways installation allowed for indoors; and upright for outdoors only.
- Main body is made of Aluminum Alloy Die-cast with silver-colored baked enamel finish.
- Dome is made from superior weather-resistant and light-translucent acrylic resin.
- Available Colors are Red, Amber, Green, and Blue.

*Cable Glands are optional parts and need to be ordered separately.

## Dimensions

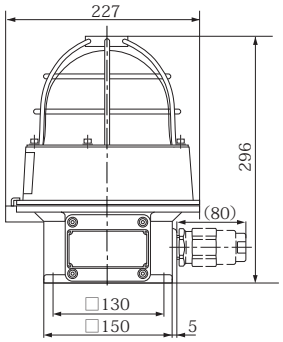


Mounting Dimensions

Mounting Hole

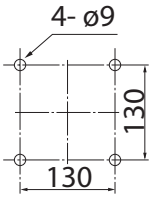


(Unit: mm)

## Specifications

| Model | Rated Voltage | Current | Flash Rate (fpm) | Bulb | | Mass |
|---|---|---|---|---|---|---|
| | | | | Ratings | Repl. No. | |
| ◎ RES-12A | DC 12V | 0.9A | 170 | 12V 10W | 9 | 6.5kg |
| ◎ RES-24A | DC 24V | 0.5A | | 24V 10W | 10 | |
| ◎ RES-48A | DC 48V | 0.3A | 150 | 48V 10W | 11 | |
| RES-100A | AC 100V - 110V | 0.1A | 170 | 12V 5W | 12 | |
| ◎ RES-120A | AC 115V - 120V | | | | | |
| RES-220A | AC 200 - 220V | 0.05A | | | | |
| ◎ RES-240A | AC 230 - 240V | | | | | |

Bulb: G18 BA15S

◎ Special Order

Courtesy of Steven Engineering, Inc. - (800) 258-9200 - sales@steveneng.com - www.stevenengineering.com

MEMO

For more details, visit our website at http://www.patlite.com

Courtesy of Steven Engineering, Inc. - (800) 258-9200 - sales@steveneng.com - www.stevenengineering.com

# Signal Tower

# ME-A/MES-A

## Signal Tower

RoHS CE UL

LED

IP42

Φ25

NPN Open-collector

Cable

## Super-slim 25mm Signal Tower with aluminum body, ideal for small devices.

FEATURES

- PATLITE's exclusive hybrid prism-cut lens designed for enhanced visibility from any direction and distance.
- Lens is made of superior impact and heat resistant polycarbonate resin for superior durability and light transmission.
- Available Colors are in Red, Amber, Green, Blue, and Clear/White.
- Specially enhanced high intensity illumination design.
- Direct mount installation with just a single hole.
- Interchangeable Modules need no re-wiring, even after installation.
- Main body is constructed of corrosion resistant anodized aluminum to retain its external beauty.
- Body Length for MES-A is 40mm, and for the ME-A is 200mm.
- Conforms to the CE requirements.
- UL recognized components (File No. E215660)

AVAILABLE BY SPECIAL ORDER

- Cable: Versatile and flexible 3m cable.
- IP54 (for ME/MES).
- PNP Compatible: ME and MES 24V Types.

### How to Order

**ME-502A-RYGBC**

Body Style
ME : Standard
MES: Short

Tiers
1~5

Rated Voltage
02: DC 24V

Color
R: Red
Y: Amber
G: Green
B: Blue
C: Clear/White
(Top to bottom)

### Easy to add and remove

- When adding or removing modules, the center shaft that matches the amount of tiers has to be purchased.

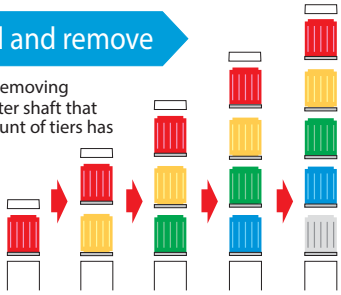

### Interchangeable LED Modules

Changeable color sequence: Easy to add/ remove up to 5 colored modules even after installation.

Note: LED modules of the same color within a signal tower will light up simultaneously.

### Wiring doesn't change

- The LED Module colors correspond to the wiring, so re-wiring is not necessary.



Courtesy of Steven Engineering, Inc. - (800) 258-9200 - sales@steveneng.com - www.stevenengineering.com

## Dimensions

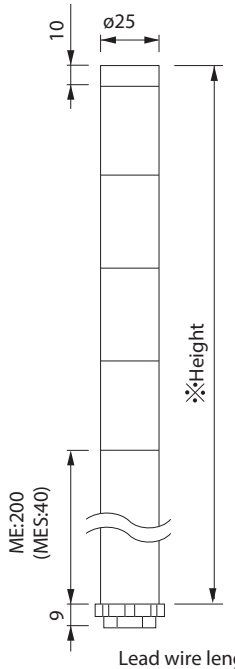


※ ME-A Type

| Height |
|---|
| 1 Tier : 240 |
| 2 Tiers: 270 |
| 3 Tiers: 300 |
| 4 Tiers: 330 |
| 5 Tiers: 360 |

※ MES-A Type

| Height |
|---|
| 1 Tier : 80 |
| 2 Tiers: 110 |
| 3 Tiers: 140 |
| 4 Tiers: 170 |
| 5 Tiers: 200 |

Lead wire length
(from wire exit)
ME-A: 300mm
MES-A: 460mm

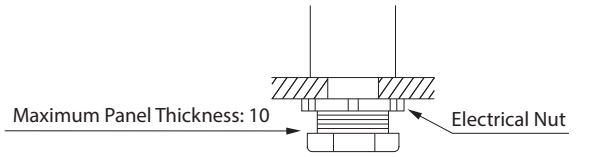


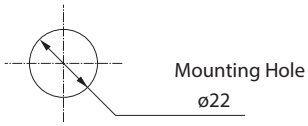


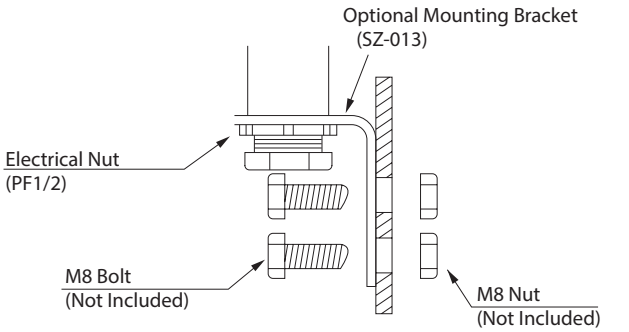


(Unit: mm)

## Wiring

- ME-A/MES-A Contact/ Switch

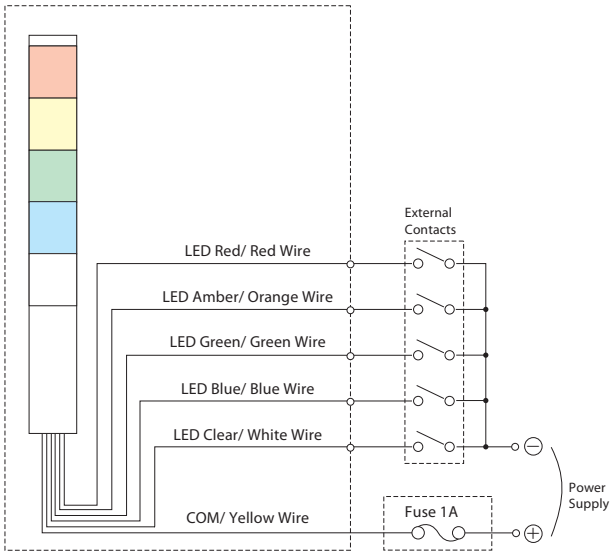


- ME-A/MES-A NPN Open Collector

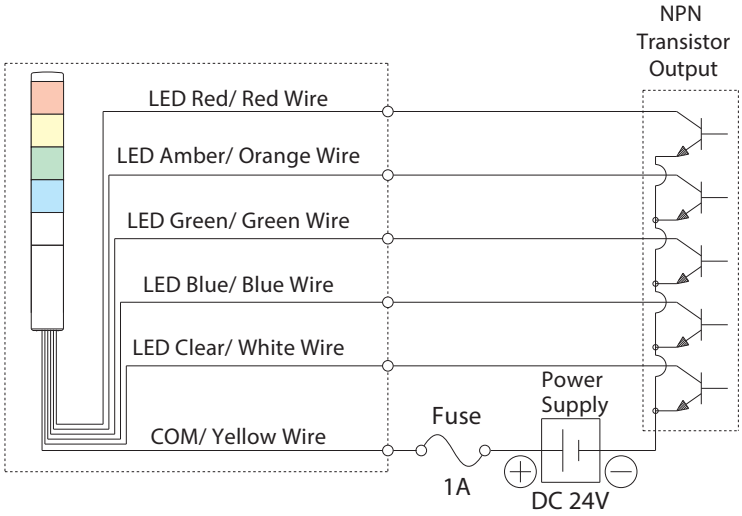


## Specifications

| Stack Number | Model | Rated Voltage | Power Consumption | Mass | |
|---|---|---|---|---|---|
| | | | | ME | MES |
| 1 Tier | ME/MES-102A-R | DC 24V | 0.6W | 220g | 120g |
| | ME/MES-102A-Y | | 0.6W | | |
| | ME/MES-102A-G | | 0.5W | | |
| | ME/MES-102A-B | | 0.5W | | |
| | ME/MES-102A-C | | 0.5W | | |
| 2 Tiers | ME/MES-202A-RY | | 1.2W | 230g | 130g |
| | ME/MES-202A-RG | | 1.1W | | |
| | ME/MES-202A-RB | | 1.1W | | |
| | ME/MES-202A-RC | | 1.1W | | |
| 3 Tiers | ME/MES-302A-RYG | | 1.7W | 240g | 140g |
| | ME/MES-302A-RYB | | 1.7W | | |
| | ME/MES-302A-RYC | | 1.7W | | |
| 4 Tiers | ME/MES-402A-RYGB | | 2.3W | 250g | 150g |
| | ME/MES-402A-RYGC | | 2.3W | | |
| 5 Tiers | ME/MES-502A-RYGBC | | 2.8W | 260g | 160g |



Courtesy of Steven Engineering, Inc. - (800) 258-9200 - sales@steveneng.com - www.stevenengineering.com

# MP / MPS

## Signal Tower

RoHS CE UL

LED

IP65

Φ30

Cable

NPN/PNP Open-collector

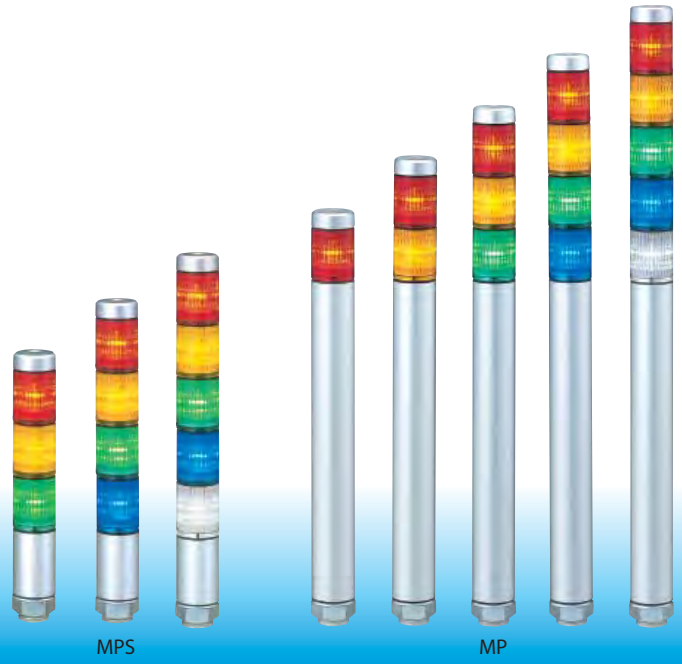


## Super slim 30mm silver body Signal Tower, ideal for small devices.

Patented reflection system increases visibility.

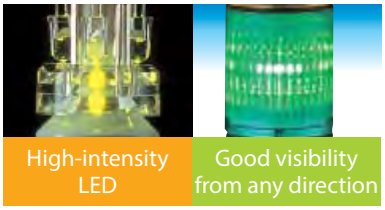


FEATURES

- PATLITE's exclusive hybrid prism-cut lens designed for enhanced visibility from any direction and distance.
- Double-insulated construction for enhanced durability and safety in the work environment.
- Direct mount installation with just a single hole.
- Interchangeable Modules need no re-wiring, even after installation.
- Main body is constructed of superior impact and heat resistant ABS resin.
- Lens is made of superior weather resistant and light translucent AS resin.
- Available Colors are in Red, Amber, Green, Blue, and Clear/White.
- Conforms to the CE requirements.
- UL Recognized Components (File No. E215660)

AVAILABLE BY SPECIAL ORDER

- All Clear Lenses: Distinctive color recognition when operated with clear lenses (B0738 type).
- Cable: Versatile and flexible 3m cable.

Optional MP-B Buzzer
(See pg. 199)

### Easy to add and remove

- When adding or removing modules, the center shaft that matches the amount of tiers has to be purchased.

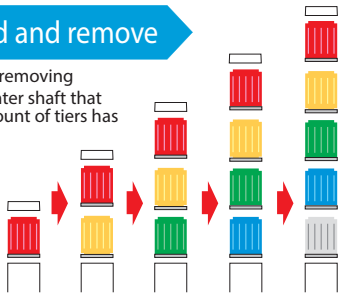

### Interchangeable LED Modules

Changeable color sequence: Easy to add/ remove up to 5 colored modules even after installation.

Note: LED modules of the same color within a signal tower will light up simultaneously.

### Wiring doesn't change

- The LED Module colors correspond to the wiring, so re-wiring is not necessary.

## How to Order

**MP-502-RYGBC**

Model
MP : Standard Body
MPS: Short Body

Tiers
1~5

Rated Voltage
02: AC/DC 24V

Color
R: Red
Y: Amber
G: Green
B: Blue
C: Clear/White
(Top to bottom)

Clear Lens Type: Model No. with B0738

## Specifications

| Stack Number | Model | Rated Voltage | Power Consumption | Mass | |
|---|---|---|---|---|---|
| | | | | MP | MPS |
| 1 Tier | MP/MPS-102 | AC/DC 24V | 0.7W | 210g | 110g |
| 2 Tiers | MP/MPS-202 | | 1.4W | 230g | 130g |
| 3 Tiers | MP/MPS-302 | | 2.0W | 250g | 150g |
| 4 Tiers | MP/MPS-402 | | 2.6W | 270g | 170g |
| 5 Tiers | MP/MPS-502 | | 3.2W | 290g | 190g |



Courtesy of Steven Engineering, Inc. - (800) 258-9200 - sales@steveneng.com - www.stevenengineering.com

## Dimensions

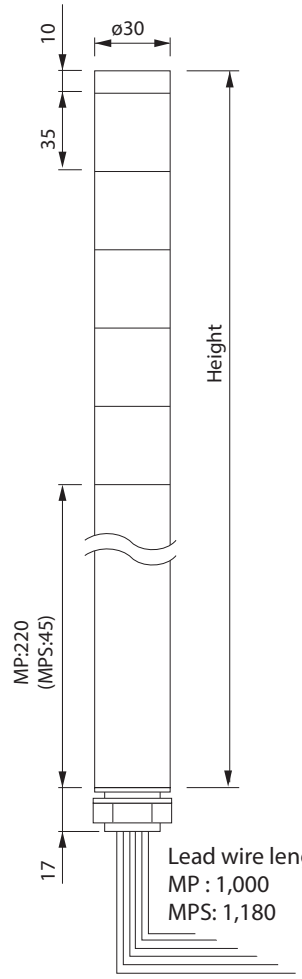


MP Type

| Height |
|---|
| 1 Tier : 265 |
| 2 Tiers: 300 |
| 3 Tiers: 335 |
| 4 Tiers: 370 |
| 5 Tiers: 405 |

MPS Type

| Height |
|---|
| 1 Tier : 90 |
| 2 Tiers: 125 |
| 3 Tiers: 160 |
| 4 Tiers: 195 |
| 5 Tiers: 230 |

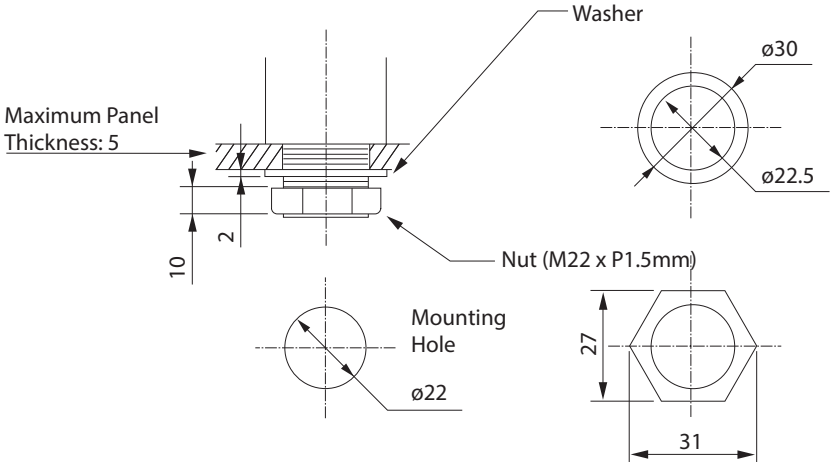


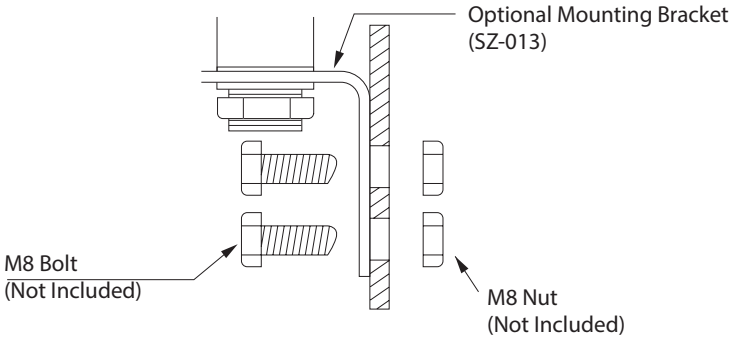


(Unit: mm)

## Wiring

- MP/MPS Contact/ Switch

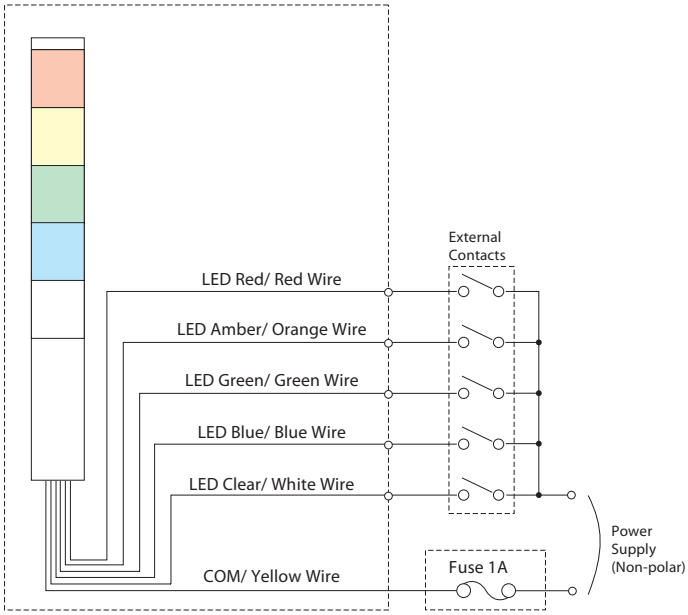


- MP/MPS NPN Open Collector

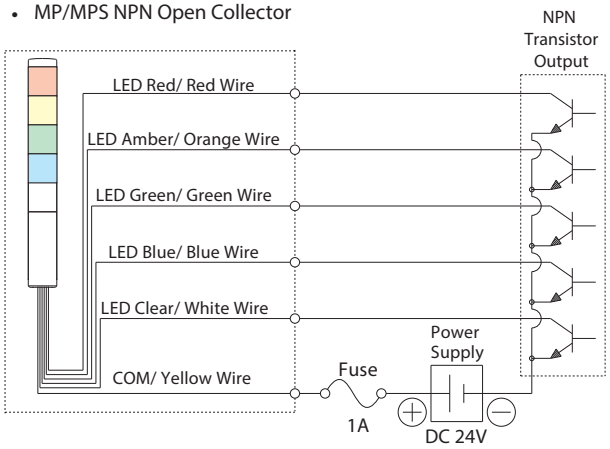


- MP/MPS PNP Open Collector

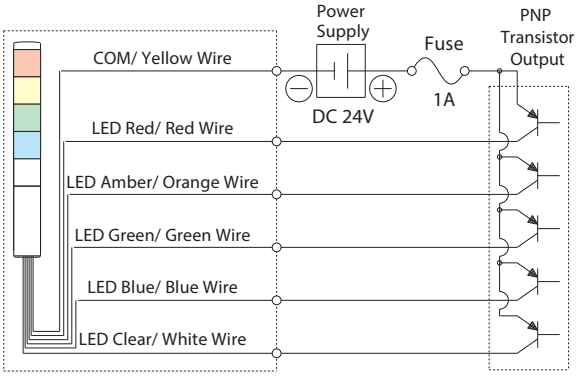




Courtesy of Steven Engineering, Inc. - (800) 258-9200 - sales@steveneng.com - www.stevenengineering.com

# MP-C

## Signal Tower

RoHS CE UL

LED

IP65

Φ30

M12 Cable

NPN/PNP
Open-collector

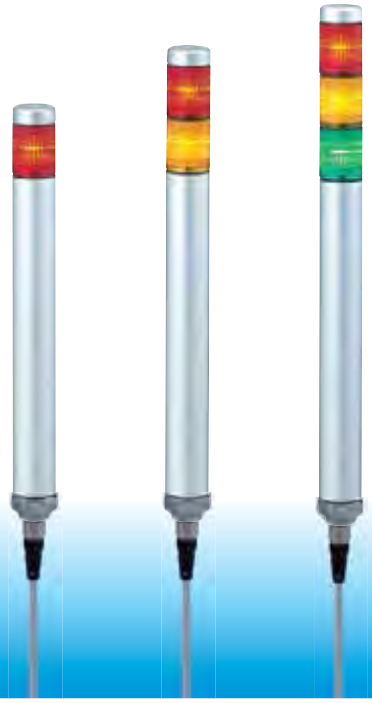

## Super slim 30mm silver body Signal Tower with M12 disconnect.

Patented reflection system increases visibility.

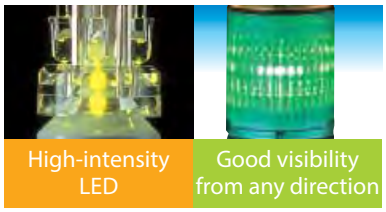

High-intensity LED | Good visibility from any direction

FEATURES

- Quick Disconnect M12 connector for the MP Signal Tower.
- PATLITE's exclusive hybrid prism-cut lens designed for enhanced visibility from any direction and distance.
- Double-insulated construction for enhanced durability and safety in the work environment.
- Direct mount installation with just a single hole.
- Interchangeable Modules need no re-wiring, even after installation.
- Main body is constructed of superior impact and heat resistant ABS resin.
- Lens is made of superior weather resistant and light translucent AS resin.
- Available in 1, 2 or 3 tier stacks with colors in Red, Amber and Green.
- Conforms to the CE requirements.
- UL Recognized Components (File No. E215660)

Optional MP-B Buzzer
(See pg. 199)

### Easy to add and remove

- When adding or removing modules, the center shaft that matches the amount of tiers has to be purchased.

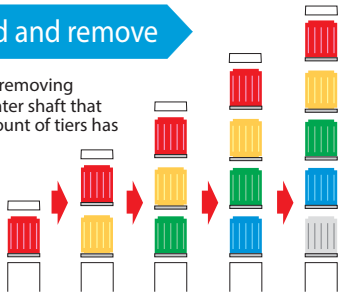

### Interchangeable LED Modules

Changeable color sequence: Easy to add/ remove up to 5 colored modules even after installation.

Note: LED modules of the same color within a signal tower will light up simultaneously.

### Wiring doesn't change

- The LED Module colors correspond to the wiring, so re-wiring is not necessary.

## How to Order

**MP-302-C-RYG**

- Model: MP : Standard Body
- Tiers: 1~3
- Rated Voltage: 02: AC/DC 24V
- Lead Type: Blank : Wire Leads; C : M12 Quick Disconnect
- Color: R: Red, Y: Amber, G: Green (Top to bottom)

## Specifications

| Stack Number | Model | Rated Voltage | Power Consumption | Mass |
|---|---|---|---|---|
| 1 Tier | MP/MPS-102 | AC/DC 24V | 0.7W | 240g |
| 2 Tiers | MP/MPS-202 | | 1.4W | 260g |
| 3 Tiers | MP/MPS-302 | | 2.0W | 280g |



Courtesy of Steven Engineering, Inc. - (800) 258-9200 - sales@steveneng.com - www.stevenengineering.com

## Part Names and Dimensions

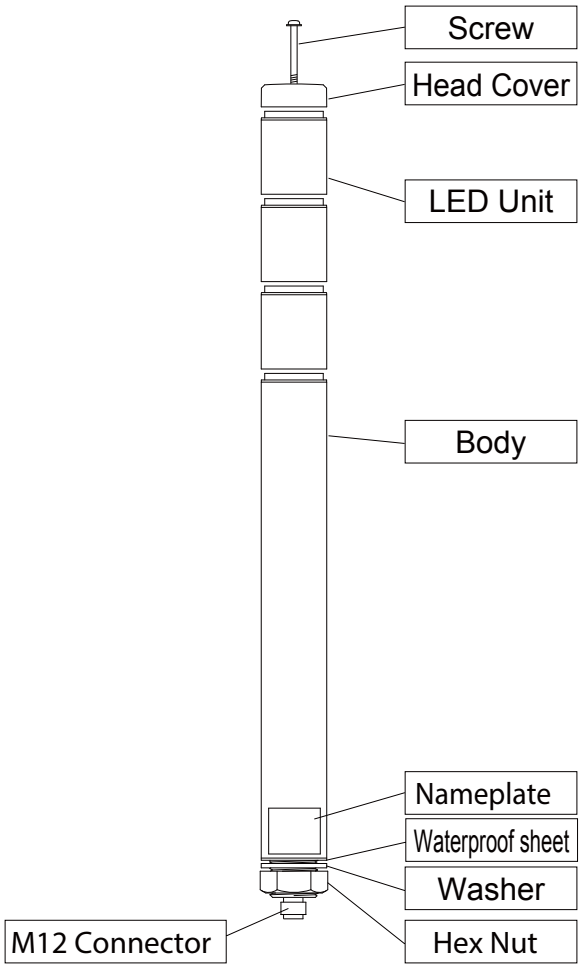


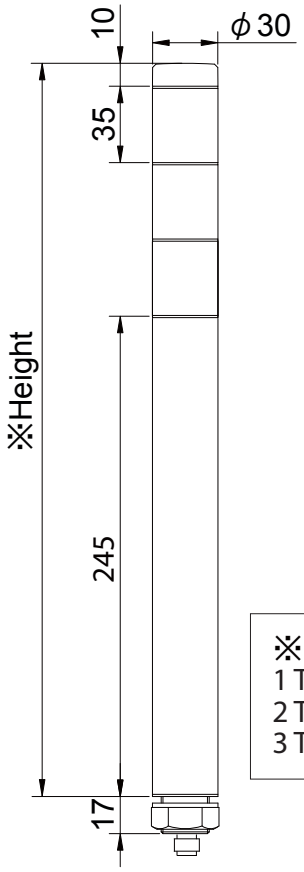


※ Height
1 Tier : 290
2 Tiers: 325
3 Tiers: 360

(Unit: mm)

## Wiring

External Contact Capacity

$I_s$ : Current Capacity $V_s$ : Withstand Voltage

| | | | | |
|---|---|---|---|---|
| LED Unit (1 Tier) | Current Consumption | Red: 29.0mA | Amber: 29.5mA | Green: 23.9mA |
| | Capacity | $I_s \geq 50$mA | | $V_s \geq 35$V DC |
| Power Supply | Current Consumption | 200mA | | |
| | Capacity | $I_s \geq 200$mA | | $V_s \geq 35$V DC |

M12 Connector Pin No.

| Pin No. | LED Unit Color |
|---|---|
| 1 | Green |
| 2 | Red |
| 3 | Common |
| 4 | Amber |

- MP-C M12 Connector

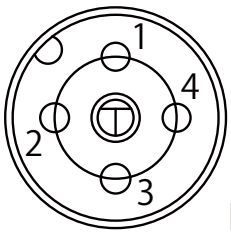


M12 Connector
Pin Layout



Courtesy of Steven Engineering, Inc. - (800) 258-9200 - sales@steveneng.com - www.stevenengineering.com

# LCE/ LCE-U

## Signal Tower

RoHS

LED

2 Alarm Sounds (FB Type)

85db at 1m (FB Type)

IP65 (LCE-FB Type: IP54)

Φ40

Cable

NPN/PNP Open-collector

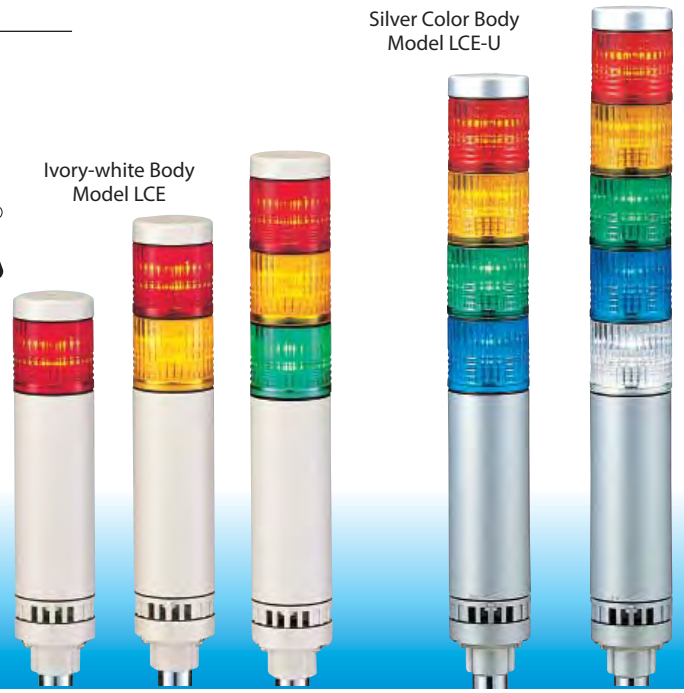

High visibility from any angle

Adjustable Volume (Max. 85dB at 1m)

Dual Reflection System

PATLITE's original dual reflection system with its exclusive hybrid prism-cut lens and 5 color LED modules creates a bright, distinctive and even illumination.

# The low-priced, high quality LED Signal Tower featuring low maintenance and energy savings.

FEATURES

- PATLITE's exclusive hybrid prism-cut lens designed for enhanced visibility from any direction and distance.
- Original Dual Reflection System for enhanced light diffusion; creating bright, distinctive illumination while saving energy.
- Two Built-in Alarms (FB Type) with selectable sound patterns.
- Adjustable volume with a maximum of 85dB (at 1m).
- Direct or pole mount installation.
- Color-coordinated Wiring Corresponding to the lens color for quick wiring and verification.
- Interchangeable LED Modules requires no re-wiring, even after installation.
- Main body made of ABS resin with superior resistance to impact and heat. (U type has silver body and 3m cable)
- Lens is made of superior impact resistant and light translucent AS resin.
- NPN/PNP Compatible inputs for 24V DC type (M2 type compatible with NPN only).
- Available Colors are in Red, Amber, Green, Blue, and Clear/White.
- High visibility from any angle.
- Conforms to the CE requirements (for 24V type).
- UL Recognized Components (File No. E215660).
- NEMA Type 4/4X/13 for -W, -FBW Only

## How to Order

**LCE-502UFBW-RYGBC-Z**

- Tiers: 1~5
- Rated Voltage: 02: AC/DC 24V; M2: AC 90~250V
- Body Color: Blank : Ivory White; U : Silver
- Type: Blank: Continuous light; FB: Flashing/ Alarm
- Mount: Blank: SZ-012 Pole Mount; K: SZ-021 Pole Mount; W: Direct Mount
- LED Color: R: Red; Y: Amber; G: Green; B: Blue; C: Clear/White (Top to bottom)
- Lens Color: Blank: Colored lens; Z: Clear lens

## Easy to add and remove

- When adding or removing modules, the center shaft that matches the amount of tiers has to be purchased.

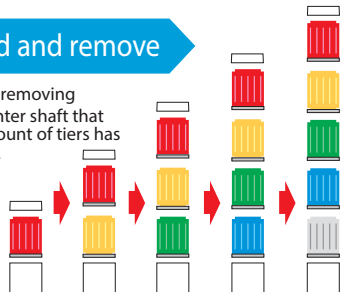

## Interchangeable LED Modules

Changeable color sequence: Easy to add/ remove up to 5 colored modules even after installation.

Note: LED modules of the same color within a signal tower will light up simultaneously.

## Wiring doesn't change

- The LED Module colors correspond to the wiring, so re-wiring is not necessary.



Courtesy of Steven Engineering, Inc. - (800) 258-9200 - sales@steveneng.com - www.stevenengineering.com

# Dimensions

## LCE Type
## LCE-U Type

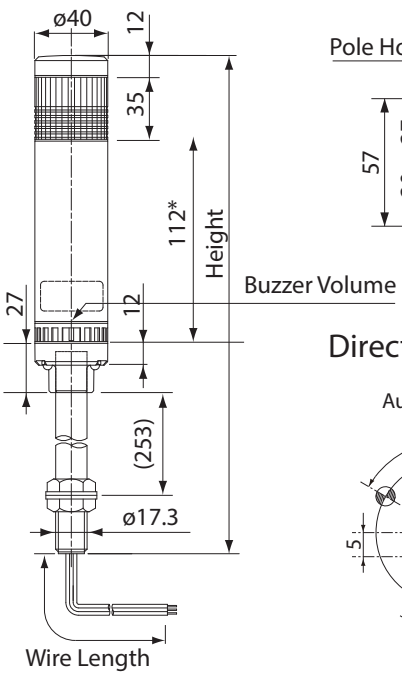


*M2-FB Type:167

## Side-Mount Bracket

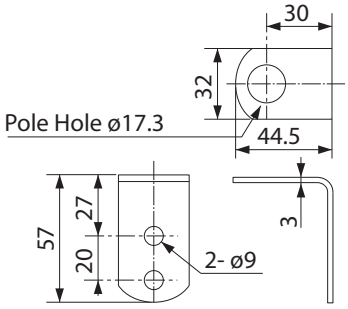


## Direct-mount Dimensions

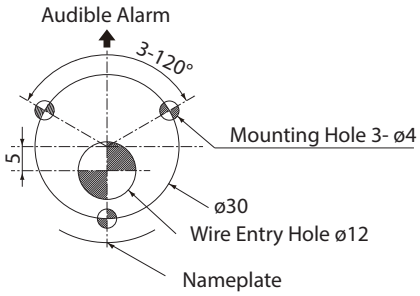


## LCE-W Type
## LCE-UW Type

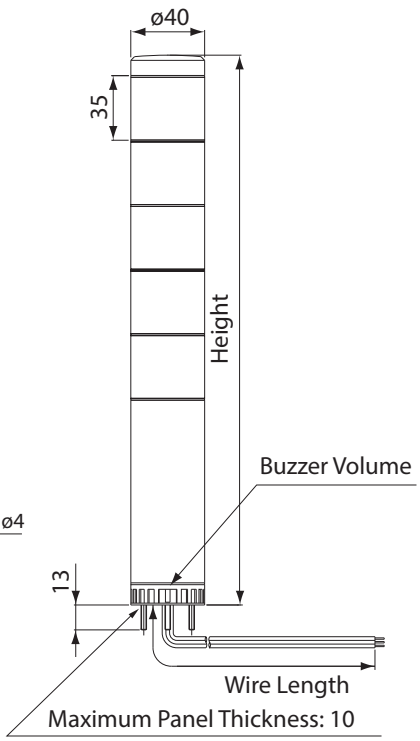


## LCE-M2FB Type

| Height |
|---|
| 1 Tier : 213 |
| 2 Tiers: 248 |
| 3 Tiers: 283 |
| 4 Tiers: 318 |
| 5 Tiers: 353 |

## LCE Type
## LCE-U Type

| Height |
|---|
| 1 Tier : 158 |
| 2 Tiers: 193 |
| 3 Tiers: 228 |
| 4 Tiers: 263 |
| 5 Tiers: 298 |

(Unit: mm)

### Wire Type and Length Chart

Model

LCE-02

Wire Area: 0.3mm$^2$ Wire Type: UL1007 Wire Length (mm): 1,100 (W Type: 1,400)
(W Type Brown Wire: 1,350)

LCE-(FB)

Wire Length: All K Type have wire length of 1,000mm

LCE-M2

Signal Wire Area: 0.3mm$^2$ Wire Type: UL1007 Wire Length (mm): 1,050 (W Type: 1,350)
Power/Ground Wire Area: 0.75mm$^2$ Wire Type: UL1015 Wire Length (mm): 1,050 (W Type: 1,350)

LCE M2FB

Signal Wire Area: 0.3mm$^2$ Wire Type: UL1007 Wire Length (mm): 950 (W Type: 1,250)
Power/Ground Wire Area: 0.75mm$^2$ Wire Type: UL1015 Wire Length (mm): 950 (W Type: 1,250)

Standard Mounting Bracket SZ-012

Mounting Bracket SZ-021

Optional Mounting Bracket SZ-011

# Specifications

| Stack Number | Model | Rated Voltage | Power Consumption | Mass | | | |
|---|---|---|---|---|---|---|---|
| | | | | LCE | LCE-W | LCE-FB | LCE-FBW |
| 1 Tier | LCE-102(U) | AC/DC 24V | 1.7W | 520g | 160g | 580g | 220g |
| | LCE-1M2 | AC 90 -250V | 1.9W | 600g | 240g | 650g | 290g |
| 2 Tiers | LCE-202(U) | AC/DC 24V | 2.4W | 550g | 190g | 610g | 250g |
| | LCE-2M2 | AC 90 -250V | 2.6W | 630g | 270g | 680g | 320g |
| 3 Tiers | LCE-302(U) | AC/DC 24V | 3.0W | 580g | 220g | 640g | 280g |
| | LCE-3M2 | AC 90 -250V | 3.2W | 660g | 300g | 710g | 350g |
| 4 Tiers | LCE-402(U) | AC/DC 24V | 3.6W | 610g | 250g | 670g | 310g |
| | LCE-4M2 | AC 90 -250V | 3.8W | 690g | 330g | 740g | 380g |
| 5 Tiers | LCE-502(U) | AC/DC 24V | 4.2W | 640g | 280g | 700g | 340g |
| | LCE-5M2 | AC 90 -250V | 4.4W | 720g | 360g | 770g | 410g |



Courtesy of Steven Engineering, Inc. - (800) 258-9200 - sales@steveneng.com - www.stevenengineering.com

# Wiring

- AC/DC 24V Lighting Type

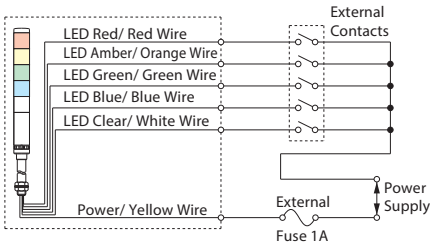


- AC 90 - 250V Lighting Type

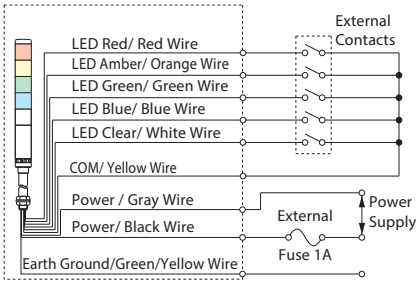


Lead-wire color coordination table

| LED Unit Color | Lead Wire Color |
|---|---|
| Red | Red |
| Amber | Orange |
| Green | Green |
| Blue | Blue |
| Clear/White | White |

| Alarm Sounds | Lead Wire Color |
|---|---|
| Buzzer 1 | Purple |
| Buzzer 2 | Skyblue |

- AC/DC 24V Lighting/Flashing Type

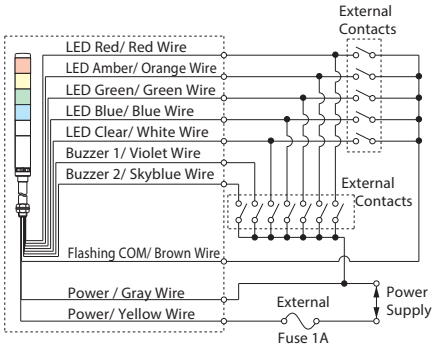


- AC 90 - 250V Lighting/Flashing Type

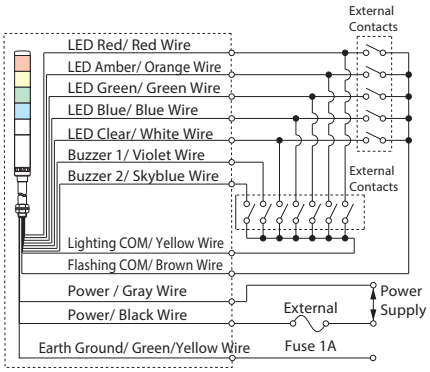


- DC 24V NPN Type

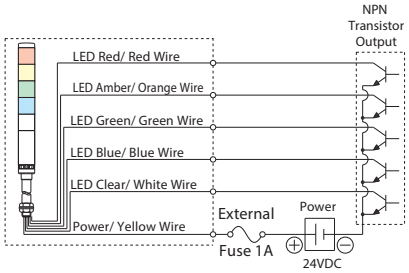


- DC 24V PNP Type

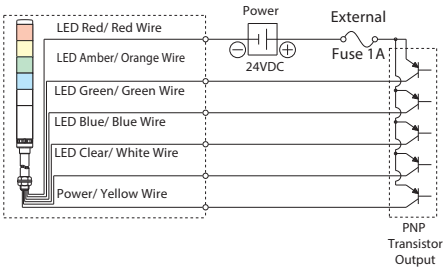


- AC 90 - 250V NPN Type

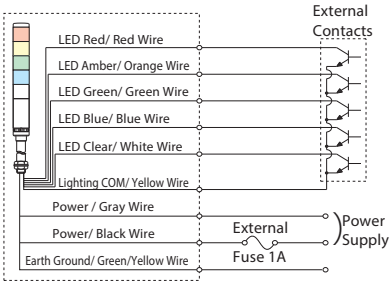


- DC 24V NPN FB Type

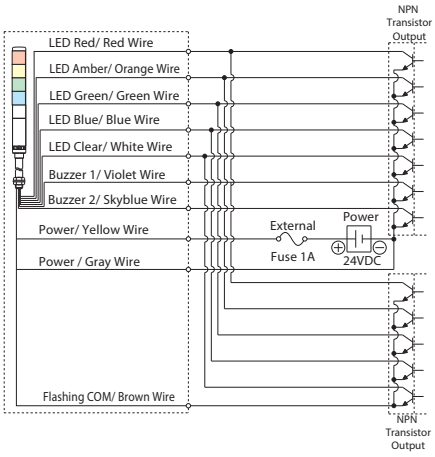


- DC 24V PNP FB Type

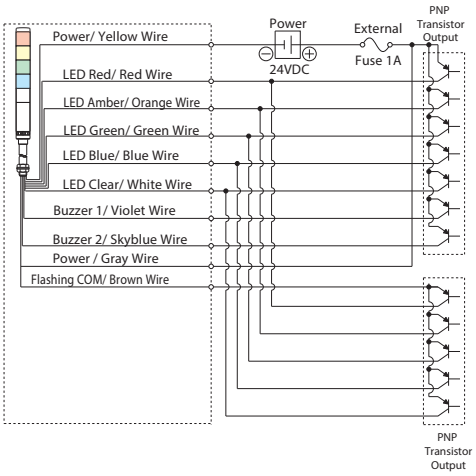


- AC 90 - 250V NPN FB Type

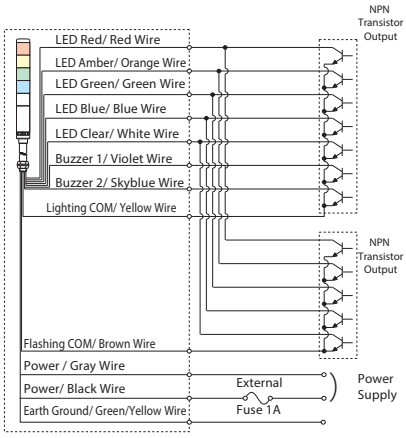


Signal Line voltage and current per LED Module

| Model | Rated Voltage | Signal Line Voltage | LED | | Alarm | |
|---|---|---|---|---|---|---|
| | | | Signal Line Current | | Signal Line Current | Inrush Current |
| | | | R, Y | G, B, C | | |
| LCE/LCE-U | AC/DC 24V | AC/DC 24V | 30mA | 25mA | 40mA | 250mA |
| LCE-M2 | AC 90V - 250V | DC 24V | 30mA | 25mA | 40mA | 250mA |



Courtesy of Steven Engineering, Inc. - (800) 258-9200 - sales@steveneng.com - www.stevenengineering.com

# LCS/LCS-U

## Signal Tower

RoHS

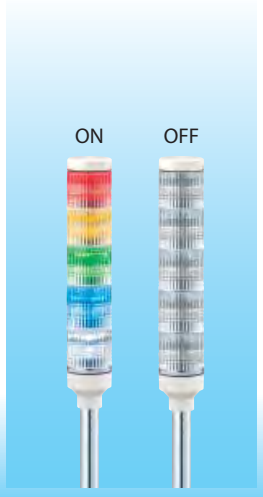


When ordering the clear-lens Signal Tower type, be sure to add "-Z" at the end of the part number when ordering

LED

IP54

Φ40

NPN/PNP
Open-collector

## Versatile LED Signal Tower, featuring high quality with low price.

Dual Reflection System

PATLITE's original dual reflection system with its exclusive hybrid prism-cut lens and 5 color LED modules creates a bright, distinctive and even illumination.

High visibility from any angle

FEATURES

- PATLITE's exclusive hybrid prism-cut lens designed for enhanced visibility from any direction and distance.
- Original Dual Reflection System for enhanced light diffusion; creating bright, distinctive illumination while saving energy.
- Direct or pole mount installation.
- Color-coordinated wiring corresponding to the lens color for quick wiring and verification.
- Interchangeable LED Modules requires no re-wiring, even after installation.
- Main body made of ABS resin with superior resistance to impact and heat.
- Lens is made of superior impact resistant and light translucent AS resin.
- Available Colors are in Red, Amber, Green, Blue, and Clear/White.
- Has the CE mark and conforms to the requirements for the EC directive.
- Is a UL Recognized Component (File No. E215660).

AVAILABLE BY SPECIAL ORDER

- Cable: Versatile and flexible 3m cable.
- Body Color: Silver (LCS-U)
- All Clear Lenses: Distinctive color recognition when operated with clear lenses (B0738 type)
- Available Colors: Red, Amber, Green, Blue, White

### Easy to add and remove

- When adding or removing modules, the center shaft that matches the amount of tiers has to be purchased.

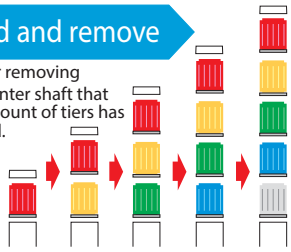

### Interchangeable LED Modules

Changeable color sequence: Easy to add/ remove up to 5 colored modules even after installation.

Note: LED modules of the same color within a signal tower will light up simultaneously.

### Wiring doesn't change

- The LED Module colors correspond to the wiring, so re-wiring is not necessary.

## How to Order

**LCS-502K- RYGBC-Z**

- Tiers: 1~5
- Rated Voltage: 02: AC/DC 24V
- Mount: Blank: SZ-012 Pole Mount; K: SZ-021 Pole Mount
- LED Color: R: Red; Y: Amber; G: Green; B: Blue; C: Clear/White (Top to bottom)
- Lens Color: Blank: Colored lens; Z: Clear lens



Courtesy of Steven Engineering, Inc. - (800) 258-9200 - sales@steveneng.com - www.stevenengineering.com

## Dimensions

LCS Type

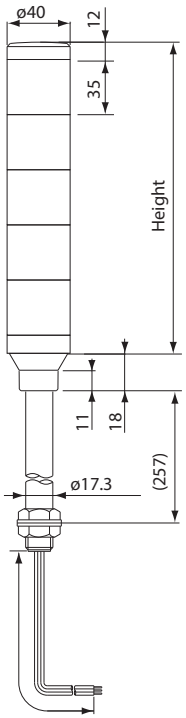


Wire Exit: about 1,150

LCS-K Type

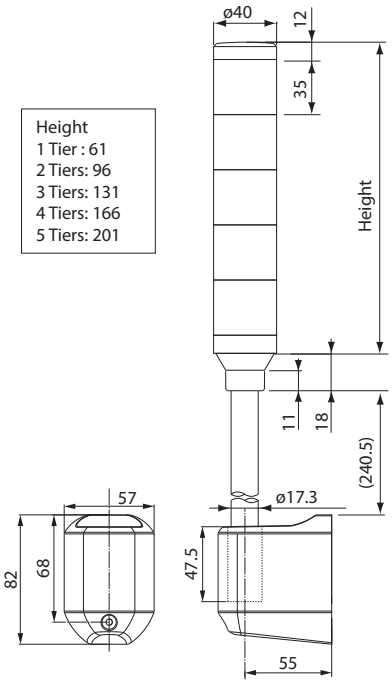


Height
1 Tier : 61
2 Tiers: 96
3 Tiers: 131
4 Tiers: 166
5 Tiers: 201

Side-Mount Bracket

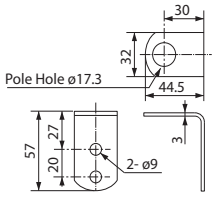


(Unit: mm)

## Specifications

| Stack Number | Model | Rated Voltage | Power Consumption | Mass | |
|---|---|---|---|---|---|
| | | | | LCS | LCS-K |
| 1 Tier | LCS-102 | AC/DC 24V | 0.7W | 420g | 540g |
| 2 Tiers | LCS-202 | | 1.4W | 450g | 570g |
| 3 Tiers | LCS-302 | | 2.0W | 480g | 600g |
| 4 Tiers | LCS-402 | | 2.6W | 510g | — |
| 5 Tiers | LCS-502 | | 3.2W | 540g | — |

Standard Mounting Bracket SZ-012

Mounting Bracket SZ-021

## Wiring

- AC/DC 24V Lighting Type

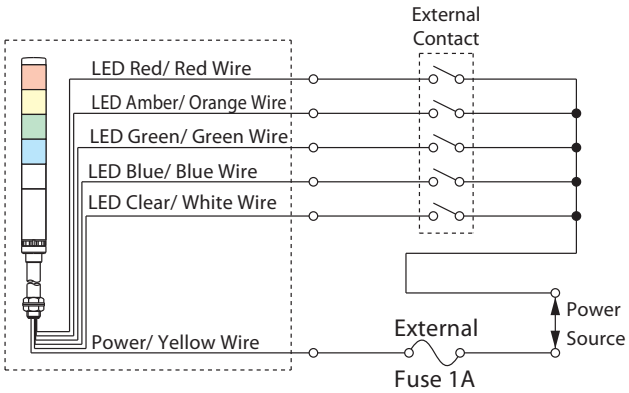


### Lead-wire color coordination table

| LED Unit Color | Lead Wire Color |
|---|---|
| Red | Red |
| Amber | Orange |
| Green | Green |
| Blue | Blue |
| Clear/White | White |

| Alarm Sounds | Lead Wire Color |
|---|---|
| Buzzer 1 | Purple |
| Buzzer 2 | Skyblue |

### Signal Line voltage and current per LED Module

| Model | Voltage Type | Signal Line Voltage | LED | | Alarm | |
|---|---|---|---|---|---|---|
| | | | Signal Line Current | | Signal Line Current | Inrush Current |
| | | | R, Y | G, B, C | | |
| LCS | AC/DC 24V | AC/DC 24V | 30mA | 25mA | 40mA | 250mA |

- DC 24V NPN Type

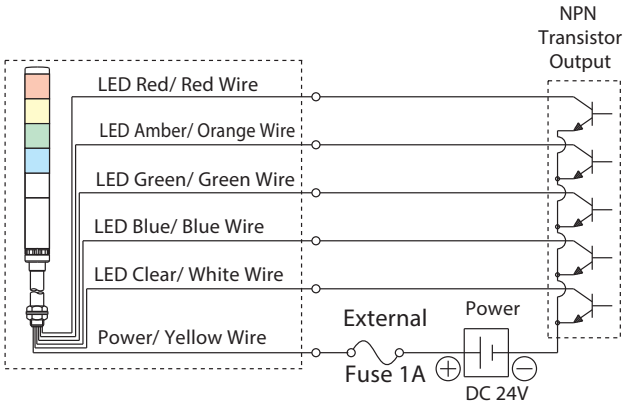


- DC 24V PNP Type

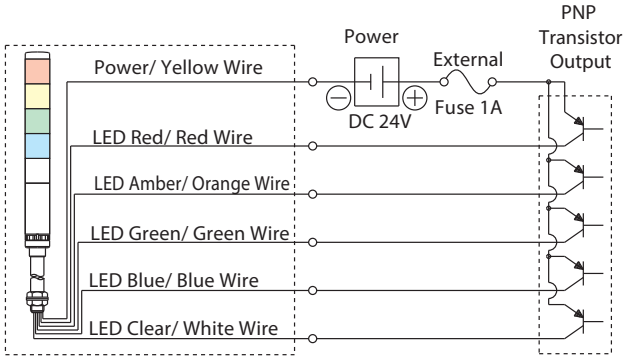




Courtesy of Steven Engineering, Inc. - (800) 258-9200 - sales@steveneng.com - www.stevenengineering.com

# LES-A

## Signal Tower

LES-A

LED

IP54 (Pole-mount IP23)

Φ50

NPN/PNP Open-collector

# Versatile, cost and energy efficient LED Signal Tower for every need.

High visibility from any angle

Dual Reflection System

PATLITE's original dual reflection system with its exclusive hybrid prism-cut lens and 5 color LED modules creates a bright, distinctive and even illumination.

FEATURES

- PATLITE's exclusive Prism-Cut Lens designed for enhanced visibility from any direction and distance.
- Original Dual Reflection System for enhanced light diffusion; creating bright, distinctive illumination while saving energy.
- Direct or pole mount installation.
- Main body is constructed of ABS resin with superior resistance to impact and heat.
- Lens is made of superior impact resistant and light translucent AS resin.
- NPN/PNP Compatible.
- Conforms to the CE requirements.
- UL Recognized Components (File No. E215660).
- Available colors* are in Red, Amber, Green, Blue, and Clear/White.
  * Tiers cannot be increased due to the number of wires corresponding to the amount of tiers.

## How to Order

**LES-502AW-RYGBC**

Tiers
1~5

Rated Voltage
02: AC/DC 24V

Mounting
Blank: Pole Mount (with SZ-012)
W: Direct Mount

Color
R: Red
Y: Amber
G: Green
B: Blue
C: Clear/White
(Top to bottom)

## Specifications

| Stack Number | | Model | Rated Voltage | Power Consumption | Mass |
|---|---|---|---|---|---|
| Pole Type | 1 Tier | LES-102A | AC/DC 24V | 0.6W | 500g |
| | 2 Tiers | LES-202A | | 1.2W | 530g |
| | 3 Tiers | LES-302A | | 1.7W | 560g |
| | 4 Tiers | LES-402A | | 2.2W | 590g |
| | 5 Tiers | LES-502A | | 2.7W | 600g |
| Direct Mount Type | 1 Tier | LES-102AW | | 0.6W | 70g |
| | 2 Tiers | LES-202AW | | 1.2W | 100g |
| | 3 Tiers | LES-302AW | | 1.7W | 130g |
| | 4 Tiers | LES-402AW | | 2.2W | 160g |
| | 5 Tiers | LES-502AW | | 2.7W | 190g |



Courtesy of Steven Engineering, Inc. - (800) 258-9200 - sales@steveneng.com - www.stevenengineering.com

# Dimensions

### LES-A Type

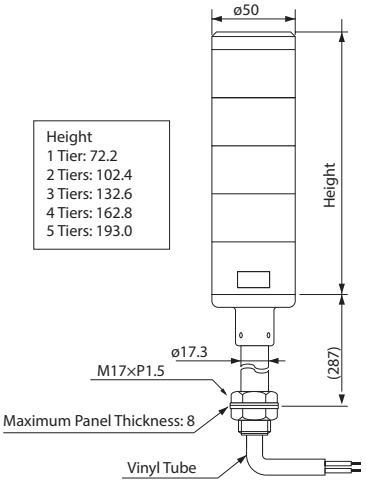


### LES-AW Type

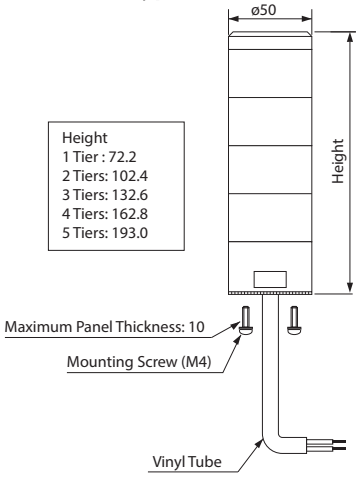


### Lead-wire color coordination table

| LED Unit Color | Lead Wire Color |
|---|---|
| Red | Red |
| Amber | Orange |
| Green | Green |
| Blue | Blue |
| Clear/White | White |

### Side-Mount Bracket

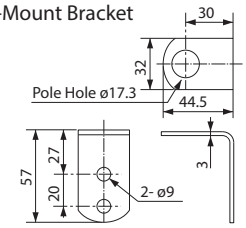


### Mounting Dimension

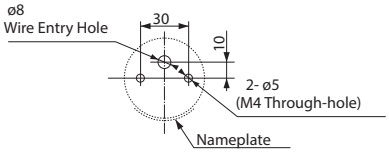


(Unit: mm)

## LES Model

- AC/DC 24V Lighting Type

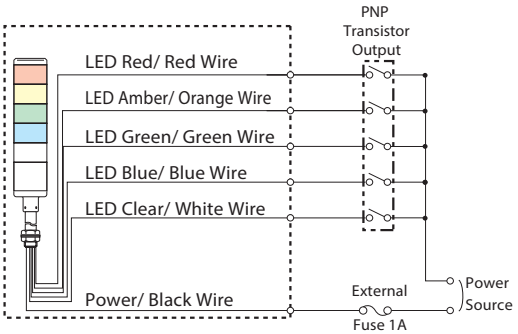


- DC 24V NPN Type

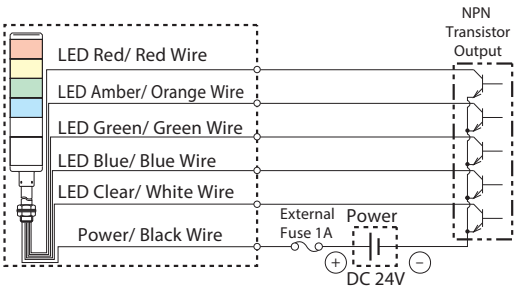


- DC 24V PNP Type

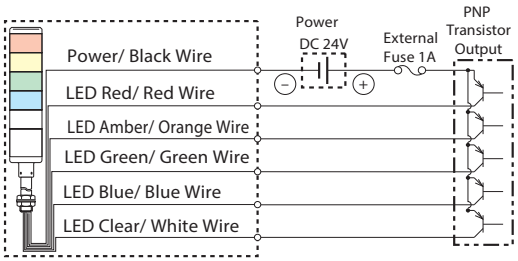


### Signal Line voltage and current per LED Module

| Model | Voltage Type | Signal Line Voltage | LED | | | Alarm | |
|---|---|---|---|---|---|---|---|
| | | | Signal Line Current | | | Signal Line Current | Inrush Current |
| | | | R, Y | G, C | B | | |
| LES | AC/DC 24V | AC/DC 24V | 25mA | 20mA | 22mA | 40mA | 150mA |

Standard
Mounting Bracket
SZ-012

Mounting Bracket
SZ-021

Optional
Mounting Bracket
SZ-011

Optional
Mounting Bracket
SZ-014



Courtesy of Steven Engineering, Inc. - (800) 258-9200 - sales@steveneng.com - www.stevenengineering.com

# LE

## Signal Tower

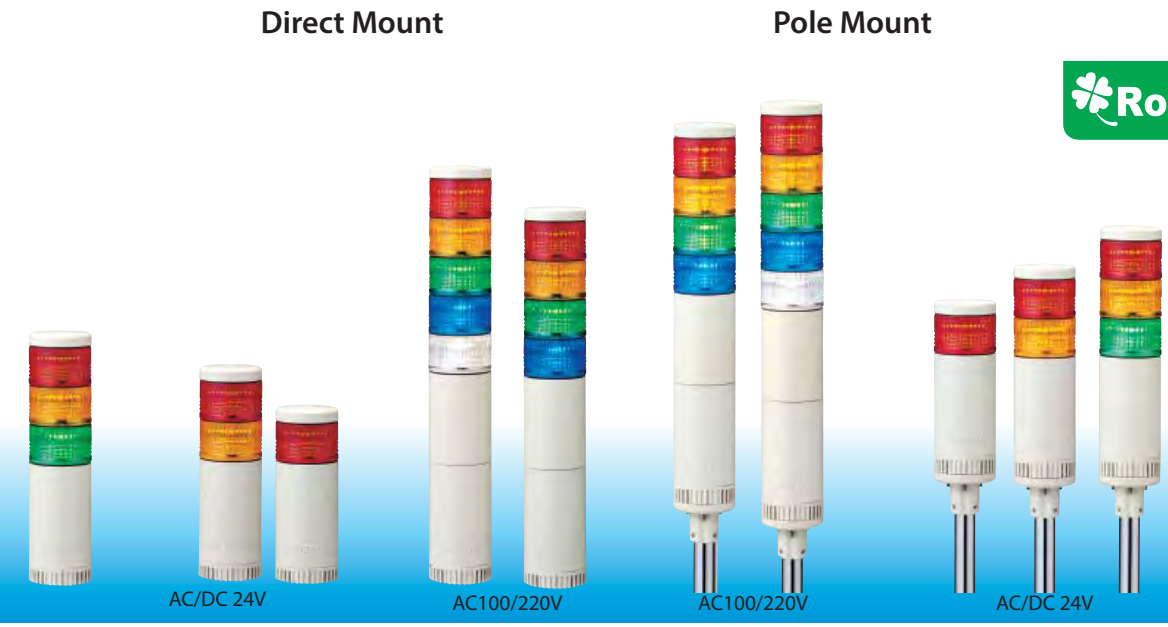


- LED
- 2 Alarm Sounds (FB Type)
- 85dB at 1m
- IP54 (Pole-mount IP23)
- Φ50
- NPN/PNP Open-collector

# Versatile, cost and energy efficient LED Signal Tower for every need.

High visibility from any angle

Dual Reflection System

PATLITE's original dual reflection system with its exclusive hybrid prism-cut lens and 5 color LED modules creates a bright, distinctive and even illumination.

FEATURES

- PATLITE's exclusive Prism-Cut Lens designed for enhanced visibility from any direction and distance.
- Original Dual Reflection System for enhanced light diffusion; creating bright, distinctive illumination while saving energy.
- Two built-in alarms (FB Type) with selectable sound patterns.
- Adjustable volume of up to 85dB (at 1m).
- Direct or pole mount installation.
- Color-coordinated wiring corresponding to the lens color for quick wiring and verification.
- Interchangeable Modules need no re-wiring, even after installation.
- Main body is constructed of ABS resin with superior resistance to impact and heat.
- Lens is made of superior impact resistant and light translucent AS resin.
- NPN/PNP Compatible (Except for LE 100/220V AC, compatible with NPN only).
- Available colors are in Red, Amber, Green, Blue, and Clear/White.
- Conforms to the CE requirements (for 12V, 24V type only).
- UL Recognized Components (File No. E215660) (for 12V,24V type only).

### Easy to add and remove

- When adding or removing modules, the center shaft that matches the amount of tiers has to be purchased.

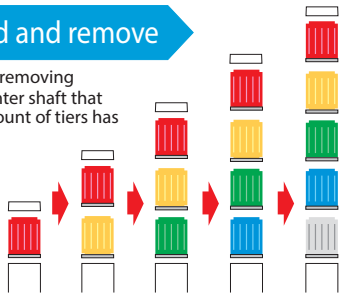

### Interchangeable LED Modules

Changeable color sequence: Easy to add/ remove up to 5 colored modules even after installation.

Note: LED modules of the same color within a signal tower will light up simultaneously.

### Wiring doesn't change

- The LED Module colors correspond to the wiring, so re-wiring is not necessary.

## How to Order

**LE-502FBW-RYGBC**

Tiers
1~5

Rated Voltage
01: AC/DC 12V
02: AC/DC 24V
10: AC 100V
20: AC 220V

Type
Blank: Continuous light
FB: Flashing/ Alarm

Mounting
P: SZ-012 Pole Mount
W: Direct Mount

Color
R: Red
Y: Amber
G: Green
B: Blue
C: Clear/White
(Top to bottom)



Courtesy of Steven Engineering, Inc. - (800) 258-9200 - sales@steveneng.com - www.stevenengineering.com

# Dimensions

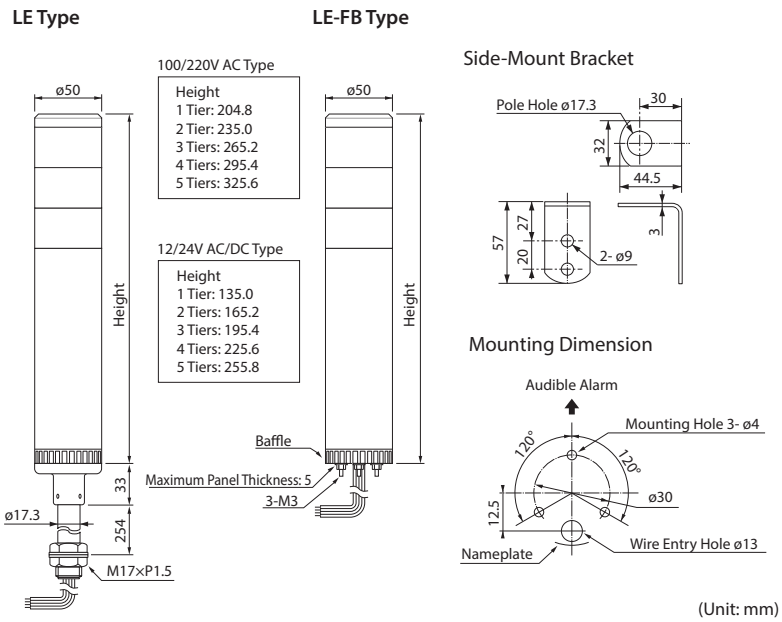


# Specifications

| Stack Number | Model | Rated Voltage | Power Consumption | Mass (FB)P | Mass (FB)W |
|---|---|---|---|---|---|
| 1 Tier | LE-101 | AC/DC 12V | 1.1W | 640g | 260g |
| | LE-102 | AC/DC 24V | 1.6W | | |
| | LE-110 | AC 100V | 5.7W | 780g | 400g |
| | LE-120 | AC 220V | | | |
| 2 Tiers | LE-201 | AC/DC 12V | 1.7W | 690g | 310g |
| | LE-202 | AC/DC 24V | 2.2W | | |
| | LE-210 | AC 100V | 6.7W | 830g | 450g |
| | LE-220 | AC 220V | | | |
| 3 Tiers | LE-301 | AC/DC 12V | 2.2W | 740g | 360g |
| | LE-302 | AC/DC 24V | 2.7W | | |
| | LE-310 | AC 100V | 7.5W | 880g | 500g |
| | LE-320 | AC 220V | | | |
| 4 Tiers | LE-401 | AC/DC 12V | 2.7W | 790g | 410g |
| | LE-402 | AC/DC 24V | 3.2W | | |
| | LE-410 | AC 100V | 8.3W | 930g | 550g |
| | LE-420 | AC 220V | | | |
| 5 Tiers | LE-501 | AC/DC 12V | 3.2W | 840g | 460g |
| | LE-502 | AC/DC 24V | 3.7W | | |
| | LE-510 | AC 100V | 9.1W | 980g | 600g |
| | LE-520 | AC 220V | | | |

Standard Mounting Bracket SZ-012

Optional Mounting Bracket SZ-021

Optional Mounting Bracket SZ-011

Optional Mounting Bracket SZ-014

# Wiring

## LE Model

- AC/DC 24V Lighting Type

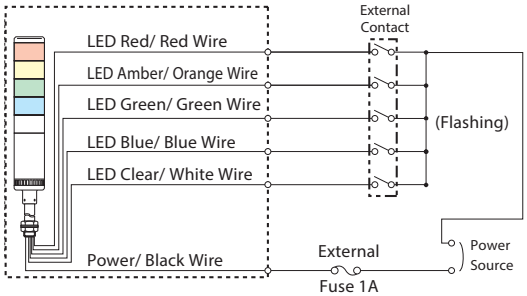


- DC 24V NPN Type

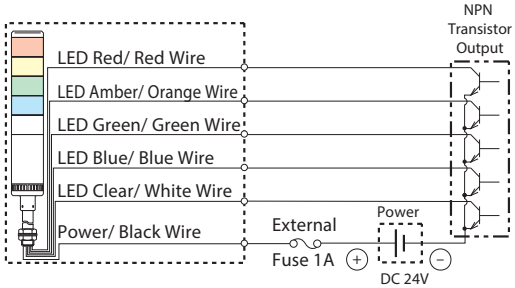


- DC 24V PNP Type

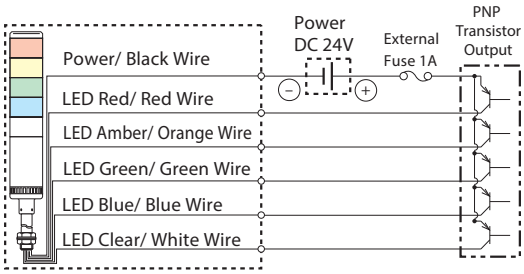


- AC/DC 24V Lighting/Flashing Type

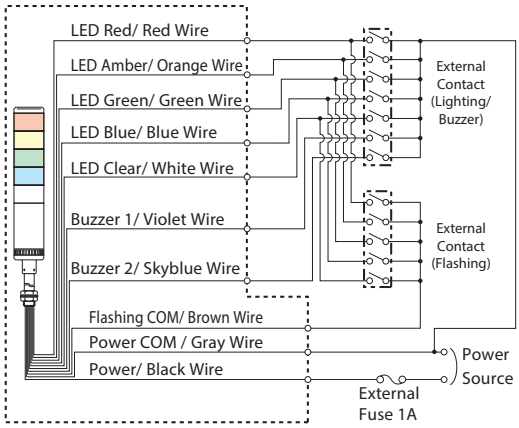




Courtesy of Steven Engineering, Inc. - (800) 258-9200 - sales@steveneng.com - www.stevenengineering.com

# LE Model

- DC 24V NPN FB Type

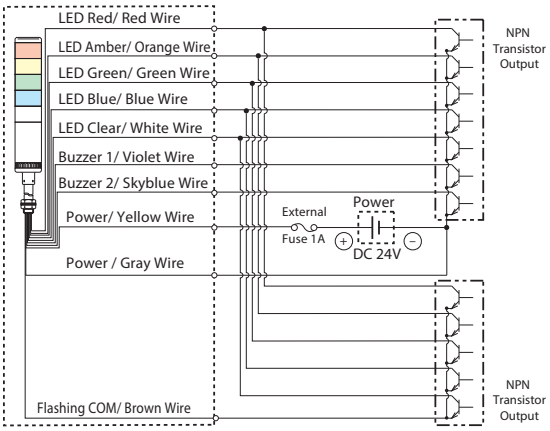


- DC 24V PNP FB Type

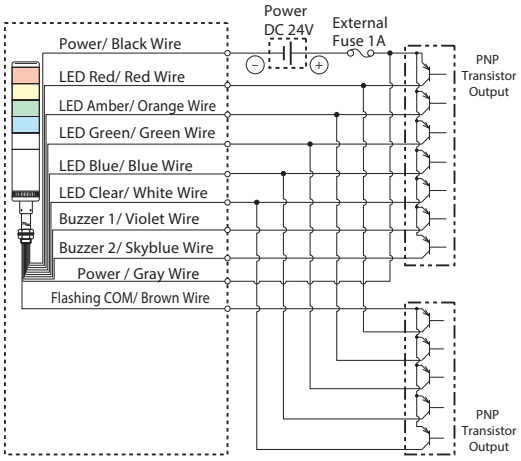


Signal Line Voltage and Current per LED Module

| Voltage Type | Signal Line Voltage | LED | | | Alarm | |
|---|---|---|---|---|---|---|
| | | Signal Line Current | | | Signal Line Current | Inrush Current |
| | | R, Y | G, C | B | | |
| AC/DC 12V | AC/DC12V | 50mA | 40mA | 44mA | 40mA | 150mA |
| AC/DC24V | AC/DC 24V | 25mA | 20mA | 22mA | | |
| AC 100V, 220V | DC 24V | 25mA | 20mA | 22mA | | |

Lead-wire color coordination table

| LED Unit Color | Lead Wire Color |
|---|---|
| Red | Red |
| Amber | Orange |
| Green | Green |
| Blue | Blue |
| Clear/White | White |

| Alarm Sounds | Lead Wire Color |
|---|---|
| Buzzer 1 | Purple |
| Buzzer 2 | Skyblue |

- AC Power Lighting Type

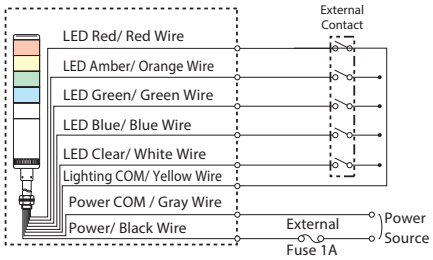


- AC Power Lighting/Flashing Type

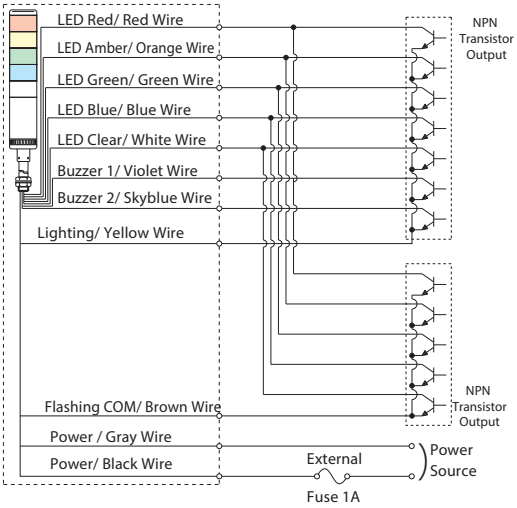


- AC Power NPN Type

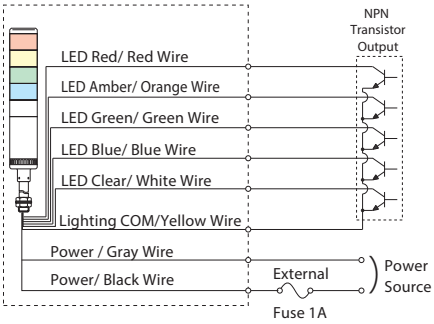


- AC Power NPN FB Type

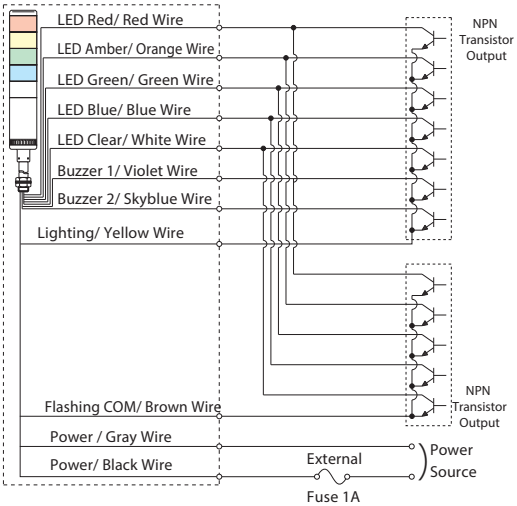




Courtesy of Steven Engineering, Inc. - (800) 258-9200 - sales@steveneng.com - www.stevenengineering.com

# LU5

## Signal Tower

RoHS CE UL

LED

2 Alarm Sounds

85dB at 1m

IP65

Φ50

NPN/PNP Open-collector

ALARM

# Versatile modular Signal Tower featuring easy assembly and wiring designed for every need.

FEATURES

- PATLITE's exclusive hybrid prism-cut lens designed for enhanced visibility from any direction and distance.
- Two built-in alarms (FB Type) with selectable sound patterns.
- Maximum volume of up to 85dB (at 1m).
- Direct or pole* mount installation.
- Color-coordinated Terminal block corresponding to the lens colors for quick wiring and verification.
- Interchangeable LED Modules requires no re-wiring, even after installation.
- Lens is made of superior impact and heat resistant polycarbonate resin for superior durability and light transmission.
- Available Colors are in Red, Amber, Green, Blue, and Clear/White.

AVAILABLE BY SPECIAL ORDER

- Modules of the same color can be modified to operate from different terminals.

* Optional part sold separately.

## How to Order

LED Module

**LU5-E-R**

LED Unit

Color
- R: Red
- Y: Amber
- G: Green
- B: Blue
- C: White/Clear

Base Unit

**LU5-02UFB**

Rated Voltage
- 02: DC 24V

Base Color
- Blank: Ivory White
- U : Silver
- K : Black

Type
- Blank: Continuous Light
- FB : Flashing/ Alarm

## Specifications (Module)

| Module Color | Model | Rated Voltage | Operating Voltage Range | Current/ Power Consumption | Mass |
|---|---|---|---|---|---|
| RED | LU5-E-R | DC 24V | 21.6V - 26.4V | 52mA/1.25W | 44g |
| AMBER | LU5-E-Y | | | | |
| GREEN | LU5-E-G | | | 42mA/1.25W | |
| BLUE | LU5-E-B | | | | |
| CLEAR | LU5-E-C | | | | |

## Specifications (Base)

| Model | Options | Rated Voltage | Operating Voltage Range | Open Collector | Mass |
|---|---|---|---|---|---|
| LU5-02 | Continuous | DC 24V | 21.6V - 26.4V | NPN/PNP | 182g |
| LU5-02FB | 2 Sounds/Flash | | | | 200g |



Courtesy of Steven Engineering, Inc. - (800) 258-9200 - sales@steveneng.com - www.stevenengineering.com

# Dimensions

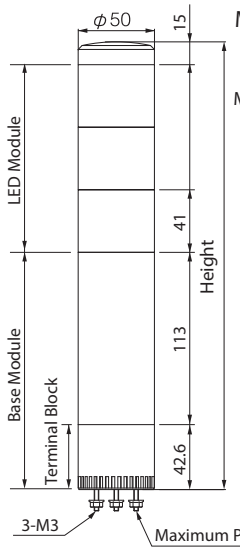


Mounting Dimensions

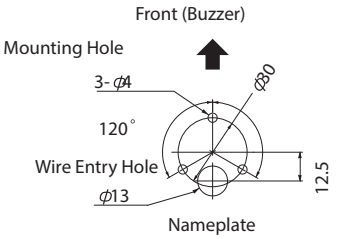


LU5 Type

Height
1 Tier : 211
2 Tiers: 252
3 Tiers: 293
4 Tiers: 334
5 Tiers: 375

(Unit: mm)

# Wiring

- DC 24V NPN Type

[CN2]

| Terminal No. | Terminal Color |
|---|---|
| 1 | Red |
| 2 | Amber |
| 3 | Green |
| 4 | Blue |
| 5 | White |
| 6 | Gray |
| 7 | Black |
| 8 | Yellow |
| 9 | Grey |
| 10 | Black |

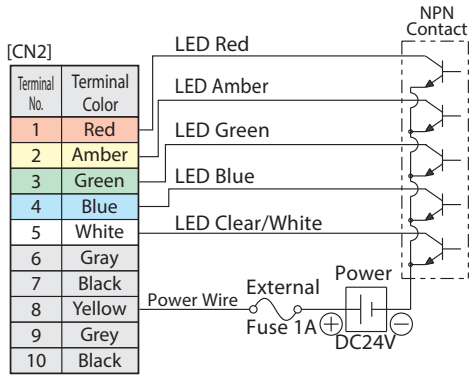


- DC 24V NPN FB Type

[CN2]

| Terminal No. | Terminal Color |
|---|---|
| 1 | Red |
| 2 | Amber |
| 3 | Green |
| 4 | Blue |
| 5 | White |
| 6 | Gray |
| 7 | Black |
| 8 | Yellow |
| 9 | Grey |
| 10 | Black |

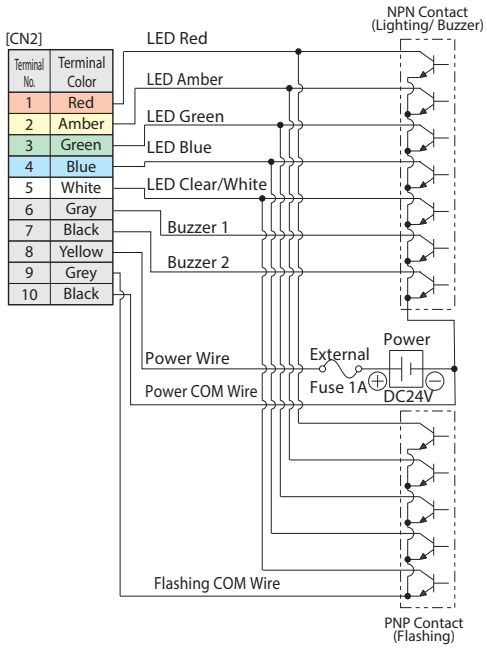


- AC/DC 24V Lighting Type

[CN2]

| Terminal No. | Terminal Color | Module/Operation |
|---|---|---|
| 1 | Red | Red LED Module |
| 2 | Amber | Amber LED Module |
| 3 | Green | Green LED Module |
| 4 | Blue | Blue LED Module |
| 5 | White | White LED Module |
| 6 | Gray | |
| 7 | Black | |
| 8 | Yellow | Power/Lighting COM |
| 9 | Grey | |
| 10 | Black | |

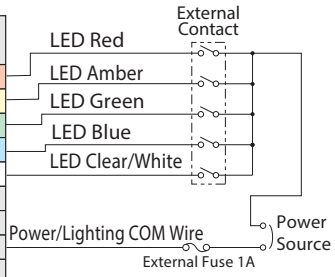


- AC/DC 24V Lighting/Flashing Type

[CN2]

| Terminal No. | Terminal Color | Module/Operation |
|---|---|---|
| 1 | Red | Red LED Module |
| 2 | Amber | Amber LED Module |
| 3 | Green | Green LED Module |
| 4 | Blue | Blue LED Module |
| 5 | White | White LED Module |
| 6 | Gray | Buzzer 1 |
| 7 | Black | Buzzer 2 |
| 8 | Yellow | Power |
| 9 | Grey | Flashing COM |
| 10 | Black | Power/ Flashing COM |

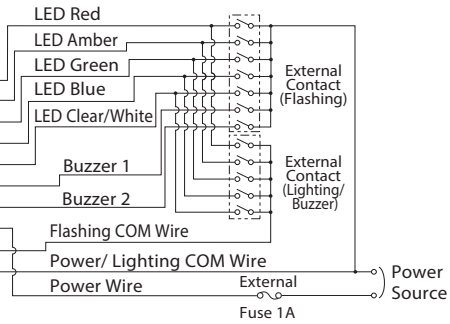


- DC 24V PNP Type

[CN2]

| Terminal No. | Terminal Color |
|---|---|
| 1 | Red |
| 2 | Amber |
| 3 | Green |
| 4 | Blue |
| 5 | White |
| 6 | Gray |
| 7 | Black |
| 8 | Yellow |
| 9 | Grey |
| 10 | Black |

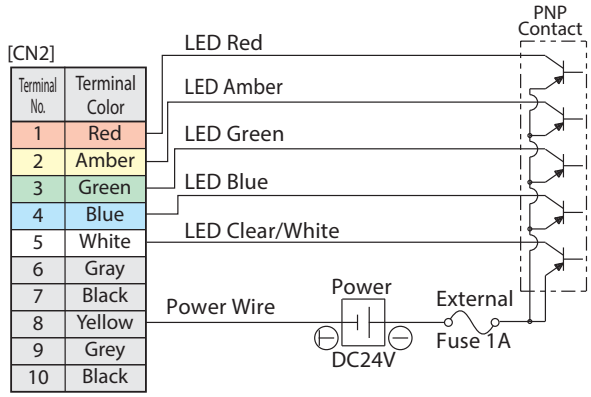


- DC 24V PNP FB Type

[CN2]

| Terminal No. | Terminal Color |
|---|---|
| 1 | Red |
| 2 | Amber |
| 3 | Green |
| 4 | Blue |
| 5 | White |
| 6 | Gray |
| 7 | Black |
| 8 | Yellow |
| 9 | Grey |
| 10 | Black |

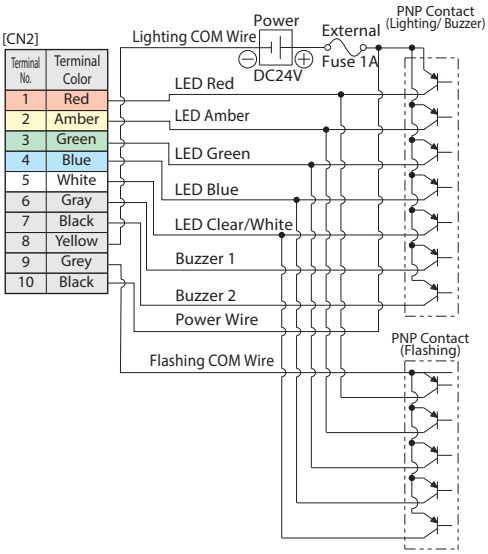


External Contact Capacity

| Specifications | | 24V DC |
|---|---|---|
| LED Unit (1 Unit) | Current Consumption | Red,Amber: 52mA Green,Blue,White/Clear: 42mA |
| | Contact Capacity | Is≥100mA, Vs≥35V AC |
| Buzzer | Current Consumption | 50mA |
| | Inrush Current | 100mA |
| | Contact Capacity | Is≥100mA, Vs≥35V AC |
| Power Supply | Current Consumption | 360mA |
| | Contact Capacity | Is≥500mA, Vs≥35V AC |
| External Contact Fuse | | |
| Voltage | | Fuse Amperage Rating |
| All Models | | 250V, 1A |

Courtesy of Steven Engineering, Inc. - (800) 258-9200 - sales@steveneng.com - www.stevenengineering.com

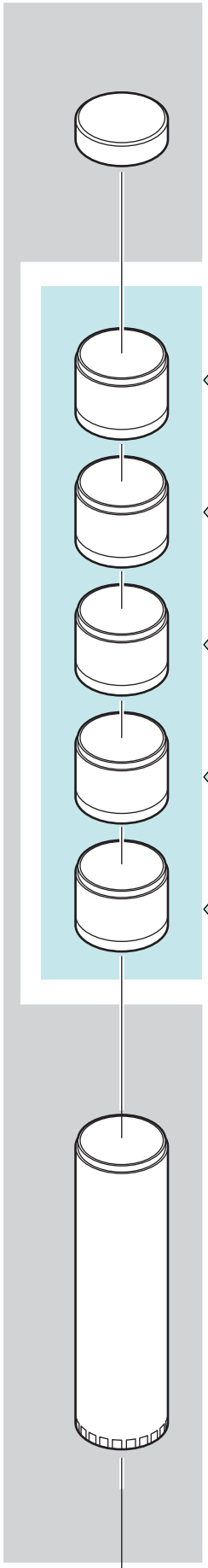

## LED Units

| Model | LU5-E-R | LU5-E-Y | LU5-E-G | LU5-E-B | LU5-E-C |
|---|---|---|---|---|---|
| Unit Color | ● | ● | ● | ● | ○ |
| Rated Voltage | DC 24V | | | | |
| Operating Voltage Range | DC 21.6 ~ 26.4V | | | | |
| Current/Power Consumption | 52mA/1.25W | | 42mA/1.0W | | |
| Operating Temperature Range | -30℃ ~ +60℃ | | | | |
| Mass (±10%) | 44g | | | | |

● RED ● AMBER ● GREEN ● BLUE ○ CLEAR/WHITE

## BASE Units

| Model | LU5-02 | LU5-02FB | |
|---|---|---|---|
| Color | ○ ● ● | | |
| Body Style | Standard | | |
| Rated Voltage | DC 24V | | |
| Operating Voltage Range | DC 21.6 ~ 26.4V | | |
| Alarm | | *Buzzer 1 | *Buzzer 2 |
| Current Consumption | | 50±10mA | 24±10mA |
| Power Cunsumption | | 1.2±0.25W | 0.58±0.25W |
| Sound Level | | Max:85±5dB (at 1m) | |
| Flashing Cycle | | 60±12 flashes per minutes | |
| Operating Temperature Range | -30℃ ~ +60℃ | | |
| Mounting Direction | Upright, indoor only | | |
| Protection Rating | IP65 | | |
| Mass (±10%) | 182g | 200g | |
| Open Collector | PNP/NPN | | |

* Buzzer 1 : Continuous Sound **Buzzer 2 : Intermittent Sound

○ Ivory White ● Silver Color (U) ● Black Color (K)

Optional Parts



Courtesy of Steven Engineering, Inc. - (800) 258-9200 - sales@steveneng.com - www.stevenengineering.com

## Optional Parts

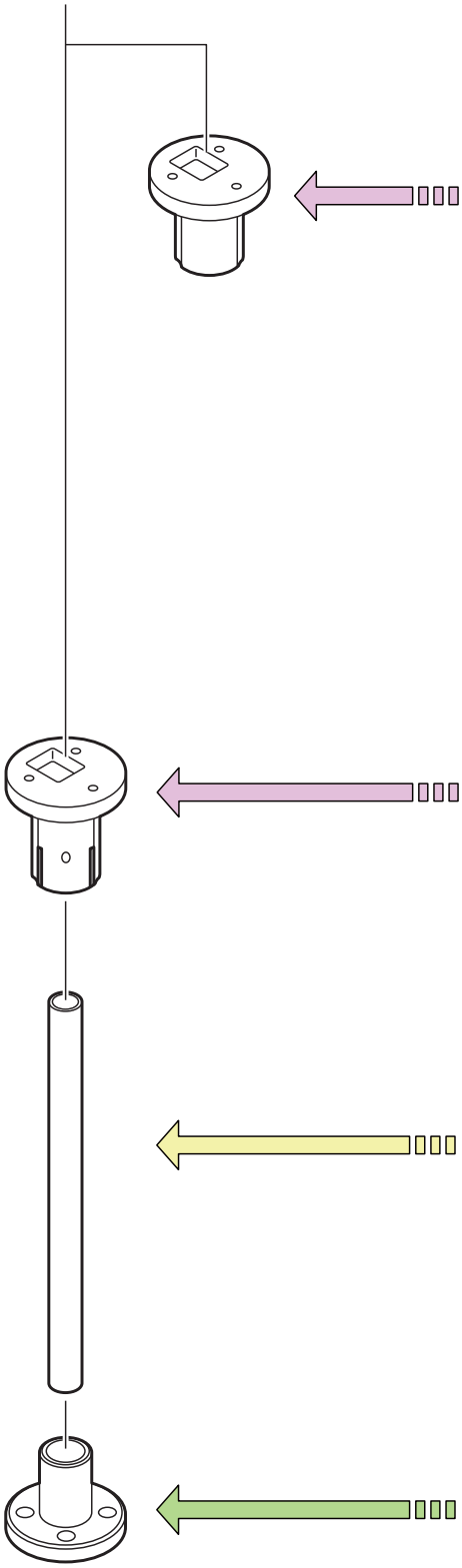

### Upper Bracket

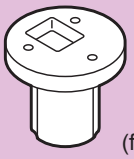

SZ-60NPT
(for 1/2" NPT Pole)

### Upper Bracket

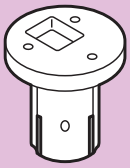

SZ-60-U

### Pole

**Steel Pole**

| Model | POLE-800S21 | POLE-300S21 | POLE-100S21 |
|---|---|---|---|
| Height | 800mm | 300mm | 100mm |

**Aluminum Pole**

| Model | POLE-800A21 | POLE-300A21 | POLE-100A21 |
|---|---|---|---|
| Height | 800mm | 300mm | 100mm |

### Mounting Bracket

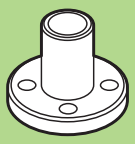

SZ-016A
(For φ21.7mm Pole)

SZ-70-B
(For φ21.7mm Aluminum Pole Only)

### Wall Mount Bracket

SZ-020
(For φ21.7mm Pole)

SZ-017
(For φ21.7mm Pole)



Courtesy of Steven Engineering, Inc. - (800) 258-9200 - sales@steveneng.com - www.stevenengineering.com

# LMS

## Signal Tower

RoHS CE UL

LED

IP65

Φ60

NPN/PNP
Open-collector

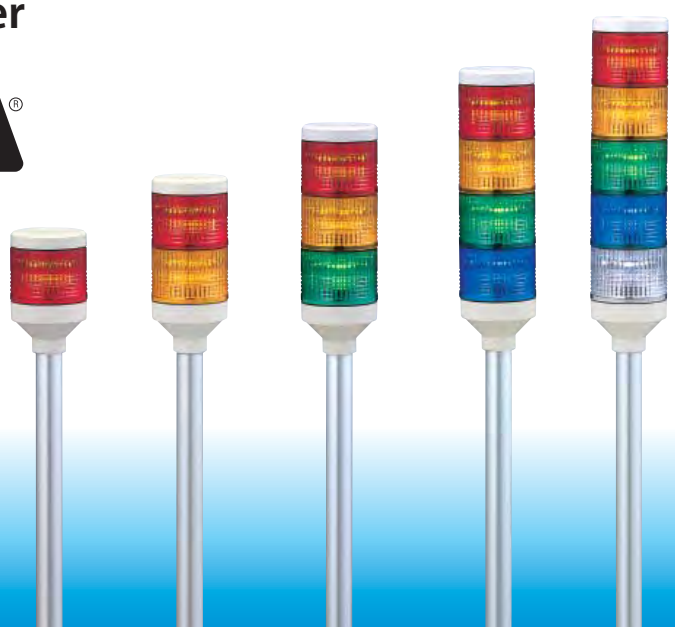

When ordering the clear-lens Signal Tower type, be sure to add "-Z" at the end of the part number when ordering

# Versatile, cost and energy efficient LED Signal Tower for every need.

Reflection System

High visibility from any angle

FEATURES

- PATLITE's exclusive hybrid prism-cut lens designed for enhanced visibility from any direction and distance.
- Original Dual Reflection System for enhanced light diffusion; creating bright, distinctive illumination while saving energy.
- Pole-mount installation.
- Interchangeable Modules need no re-wiring, even after installation.
- Main body is constructed of ABS resin with superior resistance to impact and heat.
- Lens is made of superior impact resistant and light translucent AS resin.
- Available colors are in Red, Amber, Green, Blue, and Clear/White.
- Has the CE mark and conforms to the requirements for the EC directive.
- Is a UL Recognized Component (File No. E215660)

AVAILABLE BY SPECIAL ORDER

- Model LMS-U: Silver Color Body (FB060 type).

### Easy to add and remove

- When adding or removing modules, the center shaft that matches the amount of tiers has to be purchased.

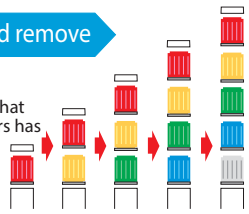

### Interchangeable LED Modules

Changeable color sequence: Easy to add/remove up to 5 colored modules even after installation.

Note: LED modules of the same color within a signal tower will light up simultaneously.

### Wiring doesn't change

- The LED Module colors correspond to the wiring, so re-wiring is not necessary.

## How to Order

**LMS-502L- RYGBC-Z**

Tiers
1~5

Rated Voltage
02: AC/DC 24V

Mounting
Blank: Pole with Circular Mounting Bracket
K: SZ-020 Pole Mount
L: SZ-013 Pole Mount

LED Color
R: Red
Y: Amber
G: Green
B: Blue
C: Clear/White
(Top to bottom)

Lens Color
Blank: Colored Lens
Z: Clear Lens



Courtesy of Steven Engineering, Inc. - (800) 258-9200 - sales@steveneng.com - www.stevenengineering.com

# Dimensions

LMS

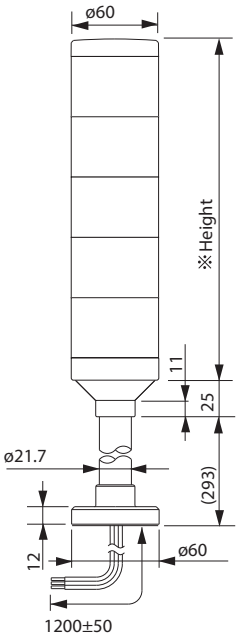


LMS Type
※Height
1 Tier: 69.2
2 Tiers: 110.4
3 Tiers: 151.6
4 Tiers: 192.8
5 Tiers: 234.0

LMS-K

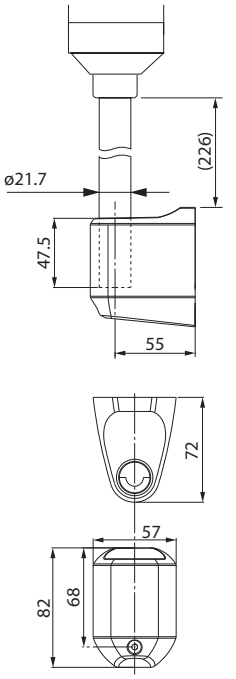


LMS-L

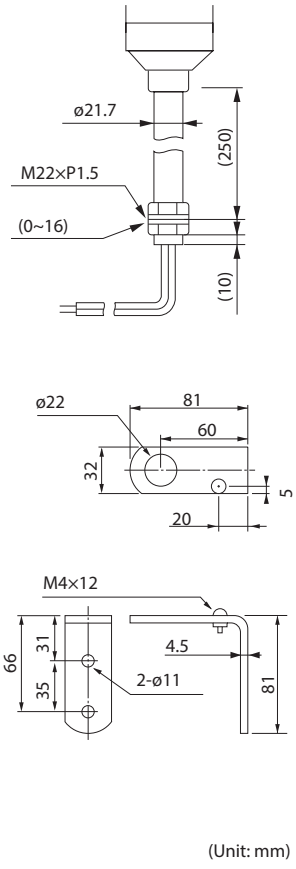

Standard Mounting Bracket

Mounting Bracket SZ-021

Standard Mounting Bracket SZ-013

Mounting Dimensions (LMS)

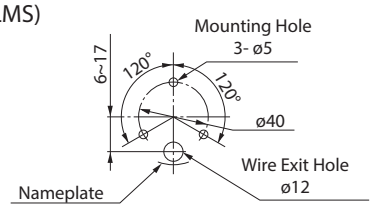


Mounting Dimensions (LMS-K)

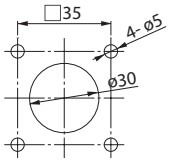


(Unit: mm)

# Wiring

- DC 24V NPN Type

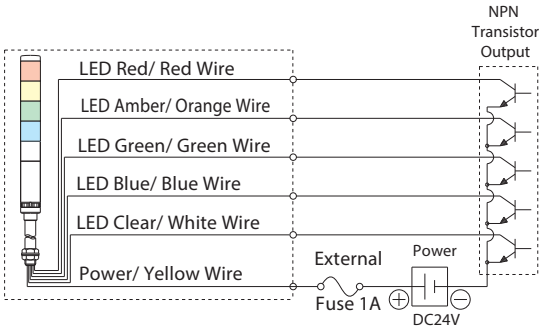


- AC/DC 24V Lighting Type

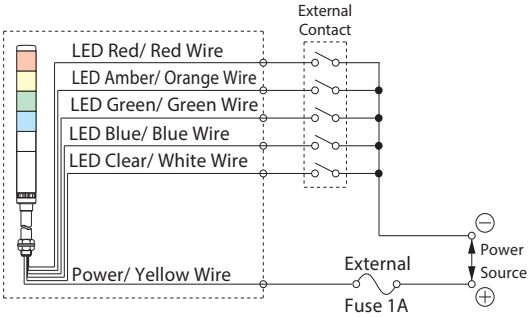


- DC 24V NPN FB Type

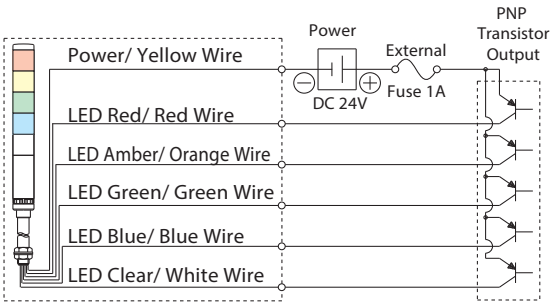


# Specifications

| Stack Number | Model | Rated Voltage | Power Consumption | Mass | | |
|---|---|---|---|---|---|---|
| | | | | LMS | LMS-L | LMS-K |
| 1 Tier | LMS-102 | AC/DC 24V | 1.2W | 290g | 620g | 420g |
| 2 Tiers | LMS-202 | | 2.4W | 340g | 670g | 480g |
| 3 Tiers | LMS-302 | | 2.8W | 390g | 720g | 540g |
| 4 Tiers | LMS-402 | | 3.2W | 440g | 770g | 600g |
| 5 Tiers | LMS-502 | | 3.6W | 490g | 820g | 660g |

Courtesy of Steven Engineering, Inc. - (800) 258-9200 - sales@steveneng.com - www.stevenengineering.com

# LME/LME-U/LME-N

## Signal Tower

RoHS

LED

2 Alarm Sounds (FB Type)

90dB at 1m (FB Type)

IP65 (FB, L, K: IP54)

Φ60

Cable (LME-U)

NPN/PNP Open-collector

When ordering the clear-lens Signal Tower type, be sure to add "-Z" at the end of the part number when ordering

## Versatile, cost and energy efficient LED Signal Tower for every need.

High visibility from any angle

Adjustable Volume (Max. 85dB at 1m)

Dual Reflection System

PATLITE's original dual reflection system with its exclusive hybrid prism-cut lens and 5 color LED modules creates a bright, distinctive and even illumination.

FEATURES

- PATLITE's exclusive hybrid prism-cut lens designed for enhanced visibility from any direction and distance.
- Original Dual Reflection System for enhanced light diffusion; creating bright, distinctive illumination while saving energy.
- Two built-in alarms (FB Type) with selectable sound patterns.
- Adjustable volume of up to 90dB (at 1m).
- Direct or pole mount installation.
- Interchangeable Modules need no re-wiring, even after installation.
- Main body is constructed of ABS resin with superior resistance to impact and heat. (U type has silver body and 3m cable)
- Lens is made of superior impact resistant and light translucent AS resin.
- NPN/PNP Compatible (Except 120/220V AC LME-U, compatible with NPN only).
- Available colors are in Red, Amber, Green, Blue, and Clear/White.
- Conforms to the CE requirements (for 24V type only).
- UL Recognized Components (File No. E215660; for 24V, 120V, 230V type only)

### Easy to add and remove

- When adding or removing modules, the center shaft that matches the amount of tiers has to be purchased.

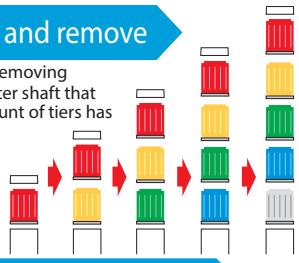

### Interchangeable LED Modules

Changeable color sequence: Easy to add/ remove up to 5 colored modules even after installation.

Note: LED modules of the same color within a signal tower will light up simultaneously.

### Wiring doesn't change

- The LED Module colors correspond to the wiring, so re-wiring is not necessary.

## How to Order

**LME-502UFBW-RYGBC-Z**

Tiers
1~5

Rated Voltage
02: AC/DC 24V
10: AC 100V
12: AC 120V
20: AC 220V
23: AC 230V

Body Color
Blank: Ivory White
N: Black
U: Silver

Type
Blank: Continuous Light
FB: Flashing/ Alarm

Mounting
Blank: Pole Mount with circular mounting bracket
K: SZ-020 Pole Mount
L: SZ-013 Pole Mount
W: Direct Mount

LED Color
R: Red
Y: Amber
G: Green
B: Blue
C: Clear/White
(Top to bottom)

Lens Color
Blank: Colored Lens
Z: Clear Lens



Courtesy of Steven Engineering, Inc. - (800) 258-9200 - sales@steveneng.com - www.stevenengineering.com

## Dimensions

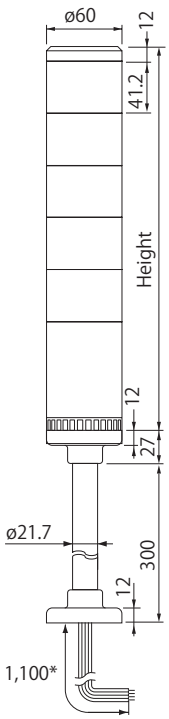


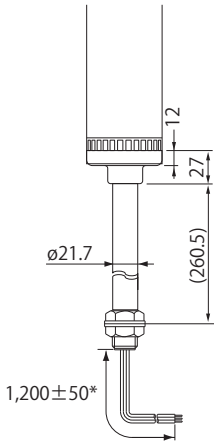


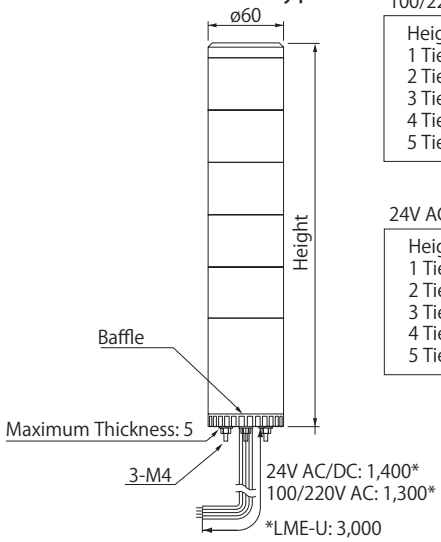


100/220V AC Type

| |
|---|
| Height |
| 1 Tier: 206.0 |
| 2 Tiers: 247.2 |
| 3 Tiers: 288.4 |
| 4 Tiers: 329.6 |
| 5 Tiers: 370.8 |

24V AC/DC Type

| |
|---|
| Height |
| 1 Tiert: 150.0 |
| 2 Tiers: 191.2 |
| 3 Tiers: 232.4 |
| 4 Tiers: 273.6 |
| 5 Tiers: 314.8 |

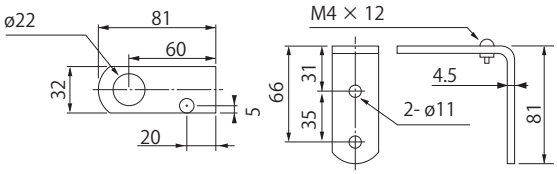


(Unit: mm)

## Specifications

| Stack Number | Model | Rated Voltage | Power Consumption | Mass | | |
|---|---|---|---|---|---|---|
| | | | | LME | LME-L | LME-W |
| 1 Tier | LME-102 | AC/DC 24V | 2.2W | 0.43kg | 0.73kg | 0.27kg |
| | LME-110 | AC 100V | 5.1W | 0.68kg | 1.06kg | 0.52kg |
| | LME-112 | AC 120V | | | | |
| | LME-120 | AC 220V | | | — | |
| | LME-123 | AC 230V | | | | |
| 2 Tiers | LME-202 | AC/DC 24V | 3.4W | 0.48kg | 0.78kg | 0.32kg |
| | LME-210 | AC 100V | 7.1W | 0.73kg | 1.10kg | 0.57kg |
| | LME-212 | AC 120V | | | | |
| | LME-220 | AC 220V | | | — | |
| | LME-223 | AC 230V | | | | |
| 3 Tiers | LME-302 | AC/DC 24V | 3.8W | 0.53kg | 0.83kg | 0.37kg |
| | LME-310 | AC 100V | 7.9W | 0.78kg | 1.14kg | 0.62kg |
| | LME-312 | AC 120V | | | | |
| | LME-320 | AC 220V | | | — | |
| | LME-323 | AC 230V | | | | |
| 4 Tiers | LME-402 | AC/DC 24V | 4.2W | 0.58kg | 0.88kg | 0.42kg |
| | LME-410 | AC 100V | 8.7W | 0.83kg | 1.18kg | 0.67kg |
| | LME-412 | AC 120V | | | | |
| | LME-420 | AC 220V | | | — | |
| | LME-423 | AC 230V | | | | |
| 5 Tiers | LME-502 | AC/DC 24V | 4.6W | 0.63kg | 0.93kg | 0.47kg |
| | LME-510 | AC 100V | 9.5W | 0.86kg | 1.22kg | 0.72kg |
| | LME-512 | AC 120V | | | | |
| | LME-520 | AC 220V | | | — | |
| | LME-523 | AC 230V | | | | |

Lead-wire color coordination table

| LED Unit Color | Lead Wire Color |
|---|---|
| Red | Red |
| Amber | Orange |
| Green | Green |
| Blue | Blue |
| Clear/White | White |

| Alarm Sounds | Lead Wire Color |
|---|---|
| Buzzer 1 | Purple |
| Buzzer 2 | Skyblue |

Signal Line voltage and current per LED Module

| Rated Voltage | Signal Line Voltage | LED | | Alarm | |
|---|---|---|---|---|---|
| | | Signal Line Current | | Signal Line Current | Inrush Current |
| | | R, Y | G, B, C | | |
| AC/DC 24V | AC/DC 24V | 50mA | 20mA | 40mA | 250mA |
| AC 100V | DC 24V | | | | |
| AC 200V | | | | | |



Courtesy of Steven Engineering, Inc. - (800) 258-9200 - sales@steveneng.com - www.stevenengineering.com

# Wiring

- AC/DC 24V Lighting Type

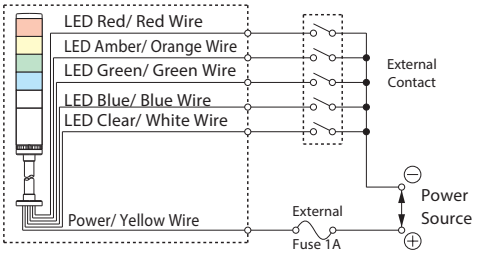


- AC Power Lighting Type

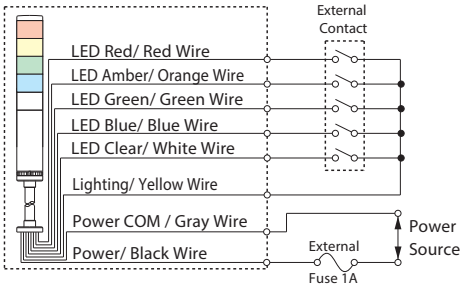


- AC/DC 24V Lighting/Flashing Type

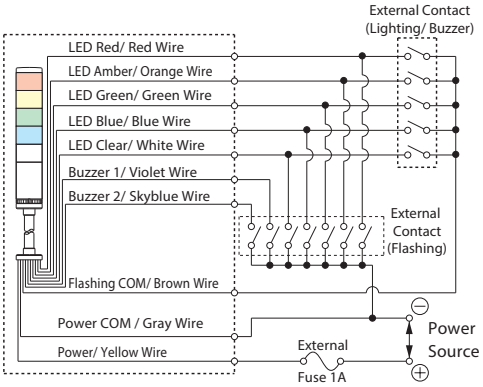


- AC Power Lighting/Flashing Type

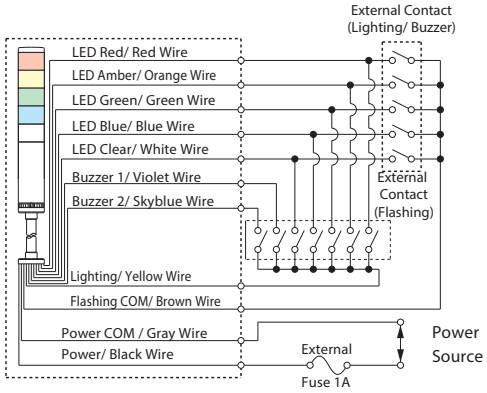


- DC 24V NPN FB Type

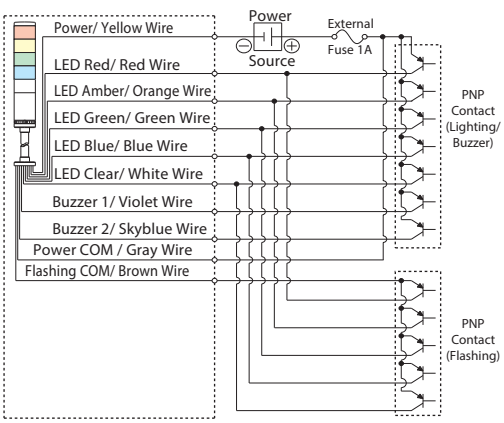


- AC Power NPN Type

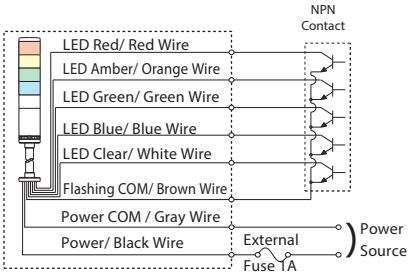


- AC Power NPN FB Type

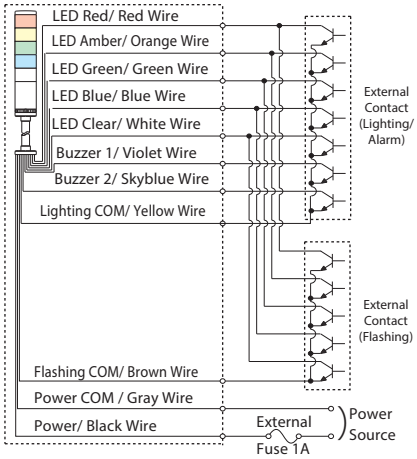


- DC 24V NPN Type

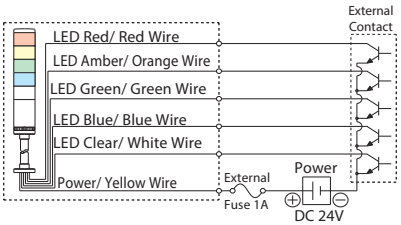


- DC 24V PNP Type

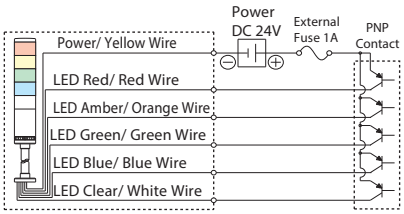


- DC 24V PNP FB Type

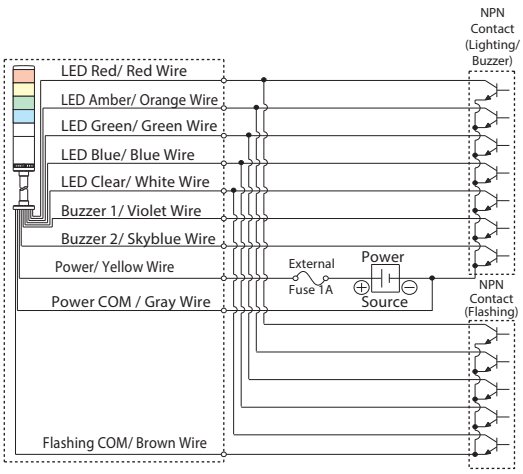




Courtesy of Steven Engineering, Inc. - (800) 258-9200 - sales@steveneng.com - www.stevenengineering.com

MEMO

For more details, visit our website at http://www.patlite.com



Courtesy of Steven Engineering, Inc. - (800) 258-9200 - sales@steveneng.com - www.stevenengineering.com

# LME-S/LME-Q

## Signal Tower

RoHS

LED

2 Alarm Sounds (FB Type)

90dB at 1m (FB Type)

IP65

Φ60

Cable

NPN Open-collector

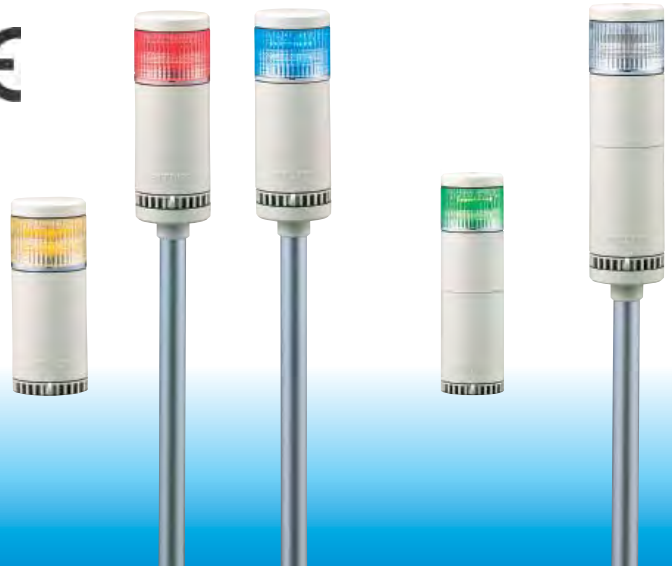

## Space-saving, multi-color single-tier LED Signal Tower.

High visibility from any angle | Adjustable Volume (Max. 85dB at 1m)

Dual Reflection System

PATLITE's original dual reflection system with its exclusive hybrid prism-cut lens and 5 color LED modules creates a bright, distinctive and even illumination.

FEATURES

- PATLITE's exclusive hybrid prism-cut lens designed for enhanced visibility from any direction and distance.
- Original Dual Reflection System for enhanced light diffusion; creating bright, distinctive illumination while saving energy.
- Two built-in alarms (FB Type) with selectable sound patterns.
- Adjustable volume of up to 90dB (at 1m).
- Direct or pole mount installation.
- Interchangeable Modules need no re-wiring, even after installation.
- PATLITE's single-tiered triple or quadruple colored unit is ideal for applications with limited vertical space.
- Pole-mount installation includes a circular mounting base as standard equipment.
- See "Color Coordination Combination" Section for available colors.

MODEL LME-S AVAILABLE BY SPECIAL ORDER

- Rated Voltage: AC/DC 24V only.
- Body: Silver Color
- Cable: Versatile and flexible 3m cable.
- PNP compatible

## How to Order

**LME-102UFBW-S1**

Rated Voltage
02: DC 24V
10: AC 100V
12: AC 120V
20: AC 220V
23: AC 230V

Body Color
Blank: Ivory White
U: Silver

Type
Blank: Continuous light
FB: Flashing/ Alarm

Mount
Blank: Pole Mount with circular mounting bracket
W: Direct Mount

Color Combinations
S1: Red, Amber, Green
S4: Red, Green, Blue
S7: Amber, Green, Blue
Q1: Red, Amber, Green, Blue
Q2: Red, Amber, Green, Clear/White
Q4: Amber, Green, Blue, Clear/White

## Specifications

| Series | Stack Number | Model | Rated Voltage | Power Consumption | Mass | |
|---|---|---|---|---|---|---|
| | | | | | LME | LME-W |
| LME-S | 1 Tier | LME-102 | DC 24V | 2.2W | 430g | 270g |
| | | LME-110 | AC 100V | 5.1W | 860g | 520g |
| | | LME-112 | AC 120V | | | |
| | | LME-120 | AC 220V | | | |
| | | LME-123 | AC 230V | | | |
| LME-Q | 1 Tier | LME-102 | DC 24V | 2.2W | 430g | 270g |
| | | LME-110 | AC 100V | 5.1W | 680g | 520g |
| | | LME-112 | AC 120V | | | |
| | | LME-120 | AC 220V | | | |
| | | LME-123 | AC 230V | | | |



Courtesy of Steven Engineering, Inc. - (800) 258-9200 - sales@steveneng.com - www.stevenengineering.com

Patlite's unique single-tier unit with triple or quadruple colors integrated.

S1: Red, Amber, Green

Q1: Red, Amber, Green, Blue

S4: Red, Green, Blue

Q1: Red, Amber, Green, Clear/White

S7: Amber, Green, Blue

Q1: Amber, Green, Blue, Clear/White

## Clear Lens

Patlite's new single-tier, multi-color unit is ideally suited for installations requiring a multiple color display but has limited vertical space. The clear lenses are easily distinguishable between lit and unlit lamps, and the unlit look can integrate visually with the equipment it is attached to.

## Dimensions

**LME Type**

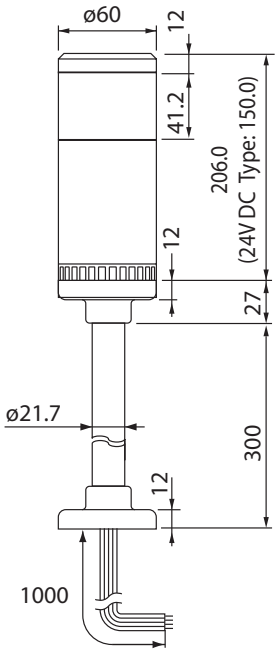


**LME-W Type**

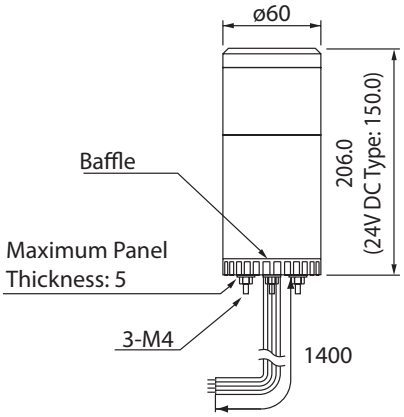


Mounting Dimensions (LME-W)

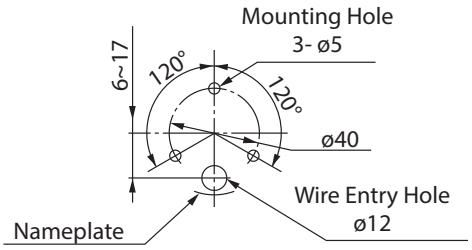


(Unit: mm)

Courtesy of Steven Engineering, Inc. - (800) 258-9200 - sales@steveneng.com - www.stevenengineering.com

# Wiring

- DC 24V Lighting Type

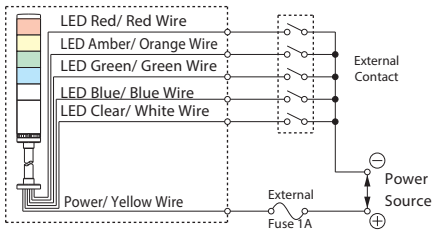


- DC 24V NPN Type

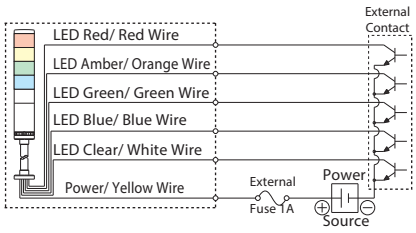


- AC Power Lighting Type

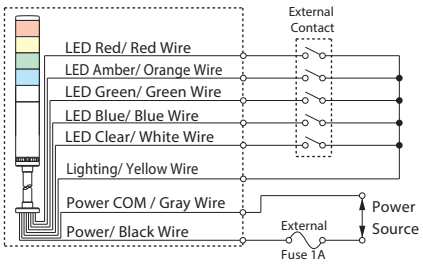


- DC 24V Lighting/Flashing Type

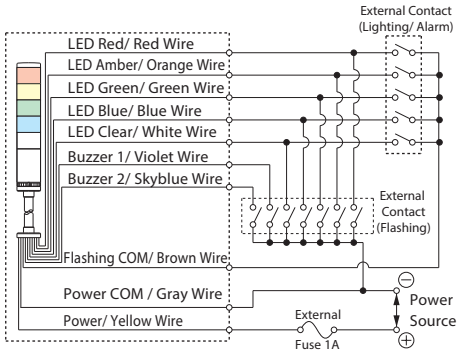


- AC Power NPN Type

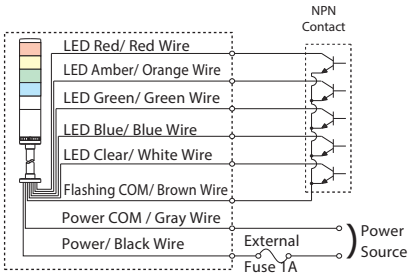


- AC Power Lighting/Flashing Type

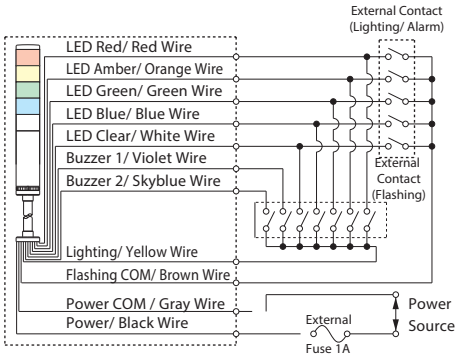


- DC 24V NPN FB Type

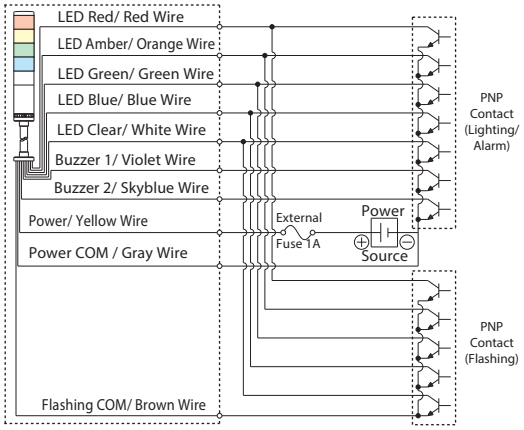


- AC Power NPN FB Type

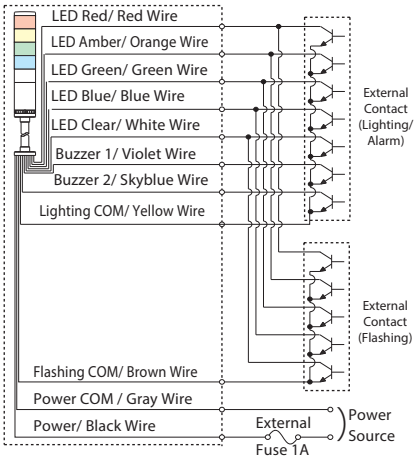


LME-S/Q Lead-wire Color Table

| | LED Unit Color | Lead Wire Color |
|---|---|---|
| S1 | Red, Amber, Green | Red, Orange, Green |
| S4 | Red, Green, Blue | Red, Green, Blue |
| S7 | Amber, Green, Blue | Orange, Green, Blue |
| Q1 | Red, Amber, Green, Blue | Red, Orange, Green, Blue |
| Q2 | Red, Amber, Green, Clear/White | Red, Orange, Green, White |
| Q4 | Amber, Green, Blue, Clear/White | Orange, Green, Blue, White |

Signal Line voltage and current per LED Module

| Rated Voltage | Signal Line Voltage | LED | | Alarm | |
|---|---|---|---|---|---|
| | | Signal Line Current | | Signal Line Current | Inrush Current |
| | | R, Y | G, B, C | | |
| DC 24V | DC 24V | 50mA | 20mA | 40mA | 250mA |
| AC 100V | DC 24V | | | | |
| AC 120V | | | | | |
| AC 200V | | | | | |
| AC 220V | | | | | |
| AC 230V | | | | | |

Lead-wire color coordination table

| LED Unit Color | Lead Wire Color |
|---|---|
| Red | Red |
| Amber | Orange |
| Green | Green |
| Blue | Blue |
| Clear/White | White |

| Alarm Sounds | Lead Wire Color |
|---|---|
| Buzzer 1 | Purple |
| Buzzer 2 | Skyblue |



Courtesy of Steven Engineering, Inc. - (800) 258-9200 - sales@steveneng.com - www.stevenengineering.com

# LHE-A

## Signal Tower

RoHS

Adjustable Volume (Max. 85dB at 1m)

- LED
- 2 Alarm Sounds (FB Type)
- 90dB at 1m (FB Type)
- IP65 (FB Type:IP54)
- Φ70
- NPN/PNP Open-collector

# The Signal Tower with a water resistant design for wet environments.

Dual Reflection System

PATLITE's original dual reflection system with its exclusive hybrid prism-cut lens and 5 color LED modules creates a bright, distinctive and even illumination.

FEATURES

- Original LED reflection system to improve brightness and provide maintenance-free operation.
- Two built-in alarms (FB type)
- Adjustable volume of up to 90dB (at 1m).
- Direct mount installation is standard; pole-mount is available with the optional mounting pole.
- Interchangeable Modules need no re-wiring, even after installation.
- Lens is made of superior impact and heat resistant AS resin for superior durability and light transmission.
- Available colors are in Red, Amber, Green, Blue, and Clear/White.
- Has the CE mark and conforms to the requirements for the EC directive. (for 24V type)
- Is a UL Recognized Component (File No. E215660, for 24V type only).

## Easy to add and remove

- When adding or removing modules, the center shaft that matches the amount of tiers has to be purchased.

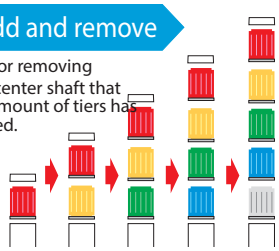

## Interchangeable LED Modules

Changeable color sequence: Easy to add/ remove up to 5 colored modules even after installation.

Note: LED modules of the same color within a signal tower will light up simultaneously.

## Wiring doesn't change

- The LED Module colors correspond to the wiring, so re-wiring is not necessary.

## How to Order

**LHE-502AFB-RYGBC**

Tiers
1~5

Rated Voltage
02: AC/DC 24V
10: AC 100V
12: AC 120V
20: AC 220V

Type
Blank: Continuous light
FB: Flashing/ Alarm

Color
R: Red
Y: Amber
G: Green
B: Blue
C: Clear/White
(Top to bottom)



Courtesy of Steven Engineering, Inc. - (800) 258-9200 - sales@steveneng.com - www.stevenengineering.com

## Dimensions

"Super Bright" LED provides the Highest level of visibility.

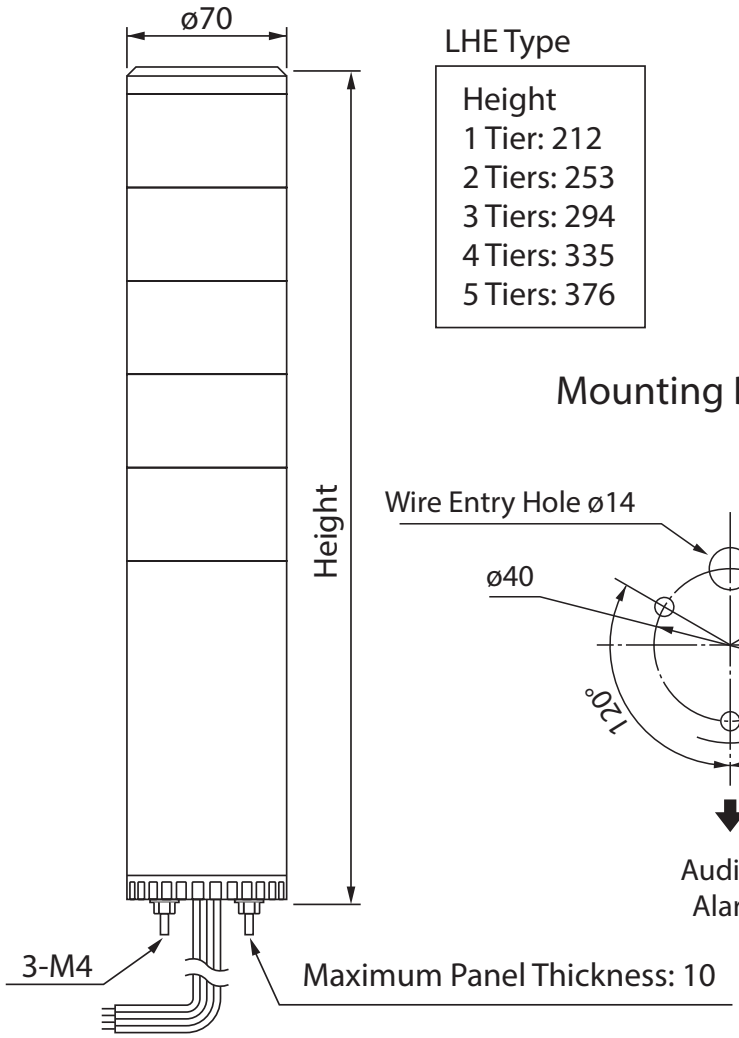


LHE Type

| Height |
|---|
| 1 Tier: 212 |
| 2 Tiers: 253 |
| 3 Tiers: 294 |
| 4 Tiers: 335 |
| 5 Tiers: 376 |

### Mounting Dimensions

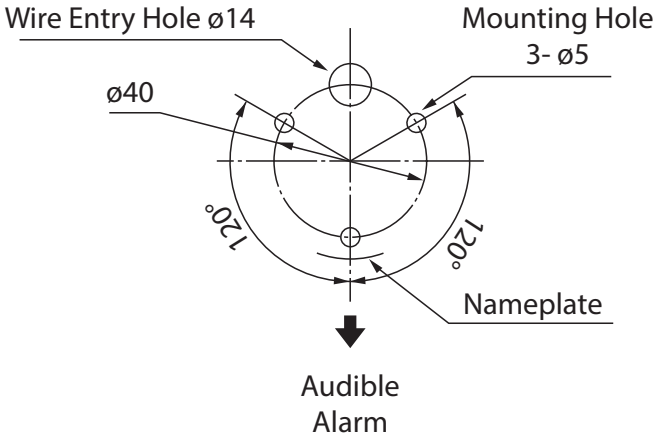


(Unit: mm)

RED

AMBER

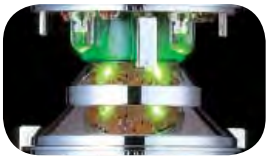

GREEN

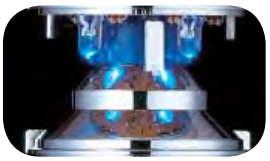

BLUE

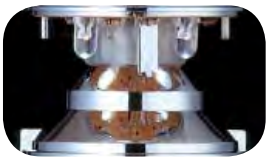

CLEAR/WHITE

## Specifications

| Stack Number | Model | Rated Voltage | Power Consumption | Mass |
|---|---|---|---|---|
| 1 Tier | LHE -102A/AFB | AC/DC 24V | 2.2W | 400g |
| | LHE -110A/AFB | AC 100V | 4.7W | 650g |
| | LHE -112A/AFB | AC 120V | | |
| | LHE -120A/AFB | AC 220V | | |
| 2 Tiers | LHE -202A/AFB | AC/DC 24V | 3.4W | 450g |
| | LHE -210A/AFB | AC 100V | 6.4W | 700g |
| | LHE -212A/AFB | AC 120V | | |
| | LHE -220A/AFB | AC 220V | | |
| 3 Tiers | LHE -302A/AFB | AC/DC 24V | 4.4W | 500g |
| | LHE -310A/AFB | AC 100V | 7.9W | 750g |
| | LHE -312A/AFB | AC 120V | | |
| | LHE -320A/AFB | AC 220V | | |
| 4 Tiers | LHE -402A/AFB | AC/DC 24V | 5.4W | 550g |
| | LHE -410A/AFB | AC 100V | 9.4W | 800g |
| | LHE -412A/AFB | AC 120V | | |
| | LHE -420A/AFB | AC 220V | | |
| 5 Tiers | LHE -502A/AFB | AC/DC 24V | 6.4W | 600g |
| | LHE -510A/AFB | AC 100V | 10.9W | 850g |
| | LHE -512A/AFB | AC 120V | | |
| | LHE -520A/AFB | AC 220V | | |



Courtesy of Steven Engineering, Inc. - (800) 258-9200 - sales@steveneng.com - www.stevenengineering.com

# Wiring

- AC/DC 24V Lighting Type

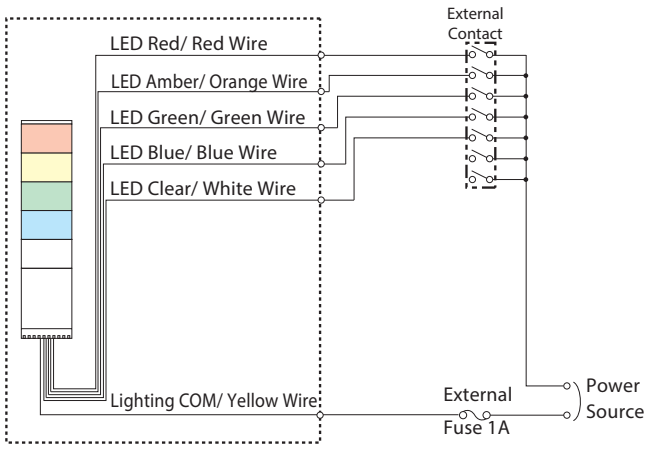


- AC Power Lighting Type

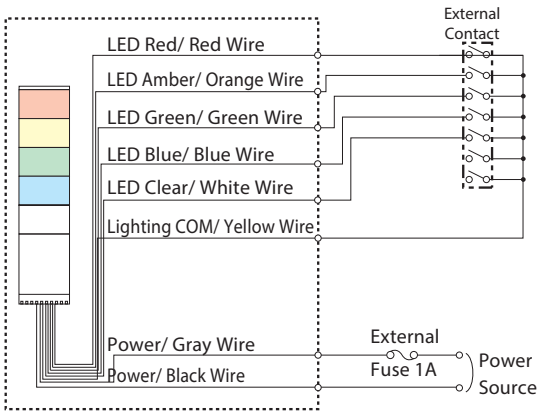


- AC/DC 24V Lighting/Flashing Type

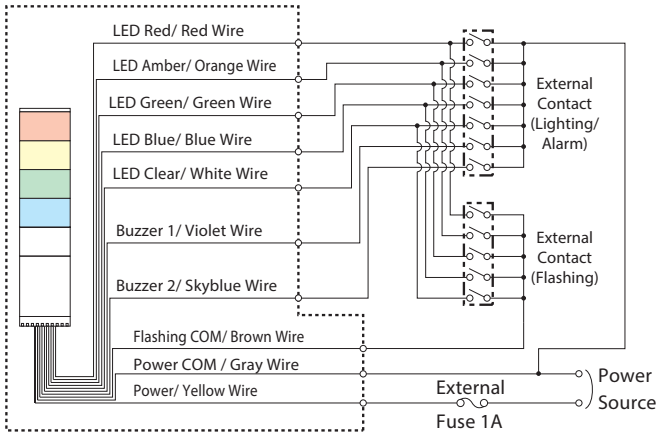


Signal Line voltage and current per LED Module

| Rated Voltage | Signal Line Voltage | LED | | Alarm | |
|---|---|---|---|---|---|
| | | Signal Line Current | | Signal Line Current | Inrush Current |
| | | R, Y | G, C, B | | |
| AC/DC 24V | AC/DC 24V | 50mA | 40mA | 40mA | 150mA |
| AC 100V | DC 24V | 50mA | 40mA | | |
| AC 120V | | | | | |
| AC 220V | | | | | |

- AC Power Lighting/Flashing Type

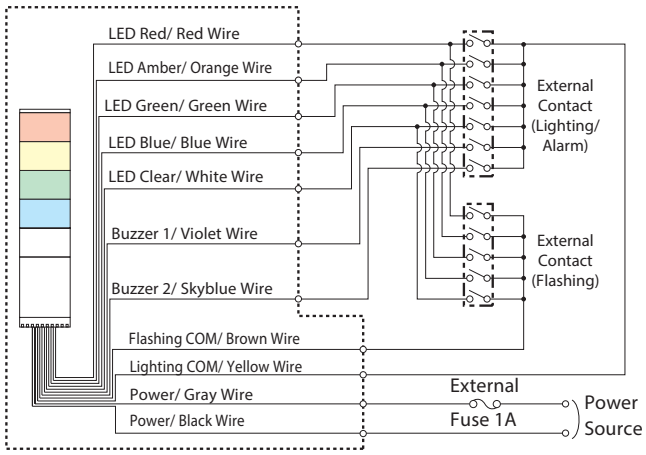


Lead-wire color coordination table

| LED Unit Color | Lead Wire Color |
|---|---|
| Red | Red |
| Amber | Orange |
| Green | Green |
| Blue | Blue |
| Clear/White | White |

| Alarm Sounds | Lead Wire Color |
|---|---|
| Buzzer 1 | Purple |
| Buzzer 2 | Skyblue |



Courtesy of Steven Engineering, Inc. - (800) 258-9200 - sales@steveneng.com - www.stevenengineering.com

# LU7

## Signal Tower

RoHS CE UL LISTED c UL us

LED

2 Alarm Sounds (FB Type)

90dB at 1m (FB Type)

IP65

Φ70

NPN/PNP Open-collector

# Versatile modular Signal Tower featuring easy assembly and wiring designed for every need.

FEATURES

- PATLITE's exclusive hybrid prism-cut lens designed for enhanced visibility from any direction and distance.
- Two built-in alarms (FB type)
- Adjustable volume of up to 90dB (at 1m).
- Direct mount installation is standard; pole-mount is available with the optional mounting pole.
- Color-coordinated Terminal block corresponding to the lens colors for quick wiring and verification.
- Interchangeable LED Modules requires no re-wiring, even after installation.
- Lens is made of superior impact and heat resistant polycarbonate resin for superior durability and light transmission.
- Available Module Colors are in Red, Amber, Green, Blue, and Clear/White.
- Available Base colors are in Black, Silver and Ivory White.
- Conforms to the CE requirements (for 24V type).
- Is a UL Recognized Component (File No. E215660).
- Product Shipped in a modular style for customer's customized assembly.

## How to Order

LED Module

**LU7-E-R**

- Model
- Unit
  - E : LED Unit
  - EX: Strobe Unit
- Color
  - R: Red
  - Y: Amber
  - G: Green
  - B: Blue
  - C: White/Clear

Base Unit

**LU7-02SUFB**

- Model
- Rated Voltage
  - 02: DC 24V
  - M2: AC 100 - 240V
- Body Size
  - Blank: Standard
  - S : Short
- Base Color
  - Blank: Ivory White
  - U : Silver
  - K : Black
- Type
  - Blank: Continuous light
  - FB: Flashing/ Alarm



Courtesy of Steven Engineering, Inc. - (800) 258-9200 - sales@steveneng.com - www.stevenengineering.com

# THE LU7 Series Advantage

70mm diameter

## Innovative LED Modular Style Signal Tower

### Ultra-bright LEDs combined with an Innovative prism-cut lens design

With the innovative prism-cut lens, a small diameter can emit enough light to be seen from great distances while reducing costs of the Signal Tower.

Ultra-bright LED

### Two selectable alarms integrated in the Base Module

Adding sound to a visual signal enhances the critical nature of the status, bringing more attention to certain conditions while still allowing up to five LED modules to be used because the alarms are built into the base.

### Delivers Sound of up to 90 dB (at 1m)

Alarm can be easily heard over ambient noises.

### Modular Design

With a modular design, freely configuring and assembling a Signal Tower is easy and the modules can be put away for when the machine has to be shipped to reduce shipping costs and shipping crate material.

Modular Construction

### Color-coded & spring-loaded Terminal Block

Easier wiring and more reliable in comparison to screw-type connections with each terminal block color corresponding to the LED module color.

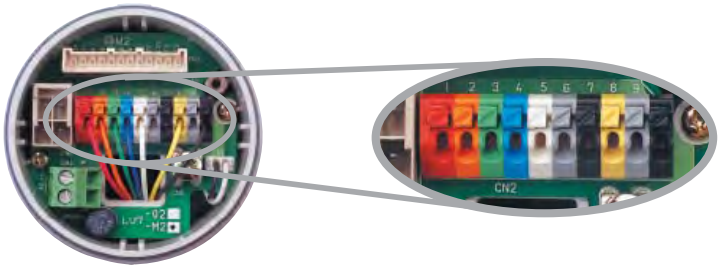

Wiring Terminals

### O-rings

The O-rings seal the tower from liquids so that an IP-65 rating can be achieved to allow the tower to be used in wet environments.

IP65 Protection

### IP65 & IP66 with Optional Cable Gland

The new LU7 is designed to add a cable gland so that a rating of IP-65 can be achieved to be used in harsher environments. (Cable Gland is to be supplied by the user.)

NEW

Cable Gland

Courtesy of Steven Engineering, Inc. - (800) 258-9200 - sales@steveneng.com - www.stevenengineering.com

# Specifications (Base)

LU7 Base Units

| Model | LU7-02S | LU7-02 | LU7-02FB | | LU7-02M2 | LU7-02M2FB | |
|---|---|---|---|---|---|---|---|
| Rated Voltage | DC 24V | | | | AC 100 to 240V (50/60Hz) | | |
| Operating Voltage Range | DC 21.6 - 26.4V | | | | AC 90 to 250V (50/60Hz) | | |
| Alarm | — | | Buzzer 1* | Buzzer 2** | — | Buzzer 1* | Buzzer 2** |
| Current Consumption | — | | 50±10mA | 24±10mA | — | 50±10mA | 24±10mA |
| Power Consumption | — | | 1.2±0.25W | 0.58±0.25W | — | 1.8±0.25W | 1.3±0.25W |
| Sound Level | — | | Max: 90±5dB (at 1m)<br>Min: 70dB or less (at 1m) | | — | Max: 90±5dB (at 1m)<br>Min: 70dB or less (at 1m) | |
| Flash Cycle | — | | 60±12 flashes per minute | | — | 60±12 flashes per minute | |
| Operating Temperature Range | -30°C to +60°C | | | | -25°C to +55°C | | |
| Mounting Direction | Upright, Indoor Only | | | | | | |
| Protection Rating | IP65 (IP66 with Cable Gland***) | | | | | | |
| Mass (±10%) | 150g | 250g | 280g | | 310g | 340g | |
| Open Collector | PNP/NPN | | | | NPN | | |

*Buzzer 1: Continuous **Buzzer 2: Intermittent ***Cable Gland to be supplied by user

Unit Color Variation

| Ivory White | Silver | Black |
|---|---|---|
| | | |
| LU7-02S | LU7-02SU | LU7-02SK |
| Standard Body | | |
| | | |
| LU7-02/M2 | LU7-02U/M2U | LU7-02K/M2K |

# Specifications (Module)

LU7 LED Units*

| Model | LU7-E-R | LU7-E-Y | LU7-E-G | LU7-E-B | LU7-E-C |
|---|---|---|---|---|---|
| | | | | | |
| Unit /LED Color | LED Unit Red | LED Unit Amber | LED Unit Green | LED Unit Blue | LED Unit White/Clear |
| Rated Voltage | DC 24V | | | | |
| Operating Voltage Range | DC 21.6 - 26.4V | | | | |
| Current/Power Consumption | 52mA/1.25W | | 42mA/1.0W | | |
| Operating Temperature Range | -30°C to +60°C | | | | |
| Mass (±10%) | 60g | | | | |

*Operates on LU7-02, LU7-02FB, LU7-M2 and LU7-M2FB Base Units

# Dimensions

(Unit: mm)

LU7
Standard Body

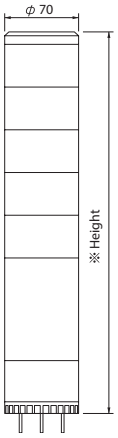


※ Height
1 Tier : 211
2 Tiers : 252
3 Tiers : 293
4 Tiers : 334
5 Tiers : 375

LU7-02S
Short Body

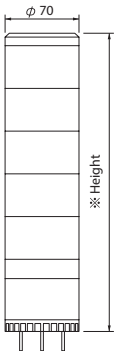


※ Height
1 Tier : 118
2 Tiers : 159
3 Tiers : 200
4 Tiers : 241
5 Tiers : 282

Mounting Dimensions

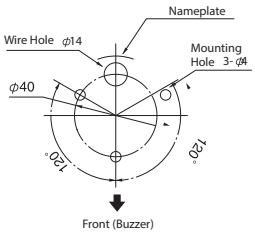


# Wiring

External Contact Capacity

| Specifications | | DC 24V | AC 100 - 240V |
|---|---|---|---|
| LED Unit (1 Unit) | Current Consumption | Red,Amber: 52mA Green,Blue,White/Clear: 42mA | |
| | Contact Capacity | Is≥100mA, Vs≥AC 35V | |
| Alarm | Current Consumption | 50mA | |
| | Inrush Current | 100mA | |
| | Contact Capacity | Is≥100mA, Vs≥AC 35V | |
| Power Supply | Current Consumption | 360mA | 40mA (250VAC) - 110mA (90VAC) |
| | Contact Capacity | Is≥500mA<br>Vs≥AC 35V | 9A (90V) - 25A (250V)<br>Vs≥AC 250V |

External Contact Fuse

| Voltage | Fuse Amperage Rating |
|---|---|
| All Models | 250V, 1A |



Courtesy of Steven Engineering, Inc. - (800) 258-9200 - sales@steveneng.com - www.stevenengineering.com

# Wiring (cont.)

- AC/DC 24V Lighting Type

[CN2]

| Terminal No. | Terminal Color | Module/Operation |
|---|---|---|
| 1 | Red | Red LED Module |
| 2 | Amber | Amber LED Module |
| 3 | Green | Green LED Module |
| 4 | Blue | Blue LED Module |
| 5 | White | White LED Module |
| 6 | Gray | |
| 7 | Black | |
| 8 | Yellow | Power/Lighting COM |
| 9 | Grey | |
| 10 | Black | |

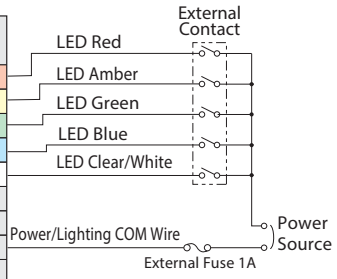


- AC Power Lighting Type

[CN2]

| Terminal No. | Terminal Color | Module/Operation |
|---|---|---|
| 1 | Red | Red LED Module |
| 2 | Amber | Amber LED Module |
| 3 | Green | Green LED Module |
| 4 | Blue | Blue LED Module |
| 5 | White | White LED Module |
| 6 | Gray | |
| 7 | Black | |
| 8 | Yellow | Power/Lighting COM |
| 9 | Grey | |
| 10 | Black | |

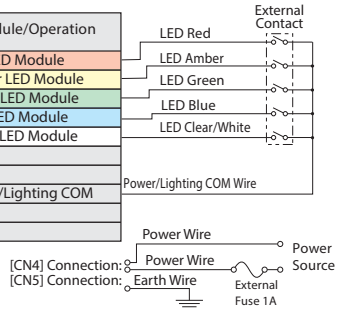


- AC/DC 24V Lighting/Flashing Type

[CN2]

| Terminal No. | Terminal Color | Module/Operation |
|---|---|---|
| 1 | Red | Red LED Module |
| 2 | Amber | Amber LED Module |
| 3 | Green | Green LED Module |
| 4 | Blue | Blue LED Module |
| 5 | White | White LED Module |
| 6 | Gray | Buzzer 1 |
| 7 | Black | Buzzer 2 |
| 8 | Yellow | Power |
| 9 | Grey | Flashing COM |
| 10 | Black | Power/ Lighting COM |

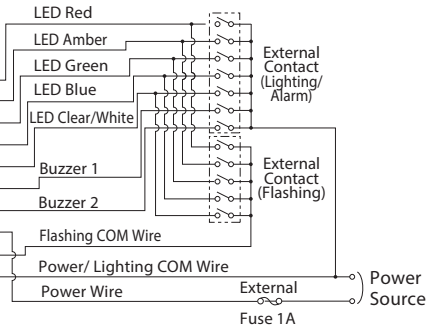


- AC Power Lighting/Flashing Type

[CN2]

| Terminal No. | Terminal Color | Module/Operation |
|---|---|---|
| 1 | Red | Red LED Module |
| 2 | Amber | Amber LED Module |
| 3 | Green | Green LED Module |
| 4 | Blue | Blue LED Module |
| 5 | White | White LED Module |
| 6 | Gray | Buzzer 1 |
| 7 | Black | Buzzer 2 |
| 8 | Yellow | Lighting COM |
| 9 | Grey | Flashing COM |
| 10 | Black | |

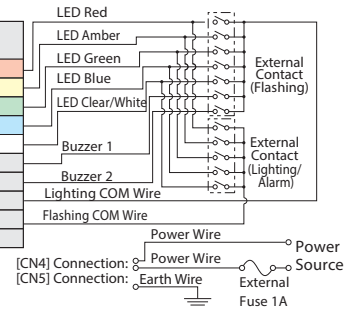


- DC 24V NPN Type

[CN2]

| Terminal No. | Terminal Color |
|---|---|
| 1 | Red |
| 2 | Amber |
| 3 | Green |
| 4 | Blue |
| 5 | White |
| 6 | Gray |
| 7 | Black |
| 8 | Yellow |
| 9 | Grey |
| 10 | Black |

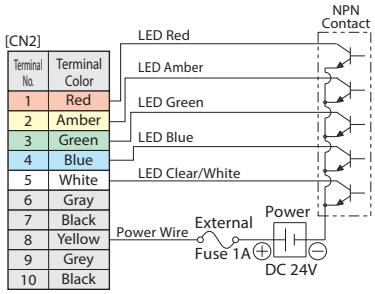


- DC 24V PNP Type

[CN2]

| Terminal No. | Terminal Color |
|---|---|
| 1 | Red |
| 2 | Amber |
| 3 | Green |
| 4 | Blue |
| 5 | White |
| 6 | Gray |
| 7 | Black |
| 8 | Yellow |
| 9 | Grey |
| 10 | Black |

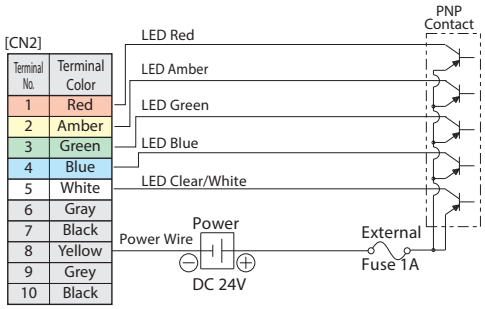


- AC Power NPN Type

[CN2]

| Terminal No. | Terminal Color |
|---|---|
| 1 | Red |
| 2 | Amber |
| 3 | Green |
| 4 | Blue |
| 5 | White |
| 6 | Gray |
| 7 | Black |
| 8 | Yellow |
| 9 | Grey |
| 10 | Black |

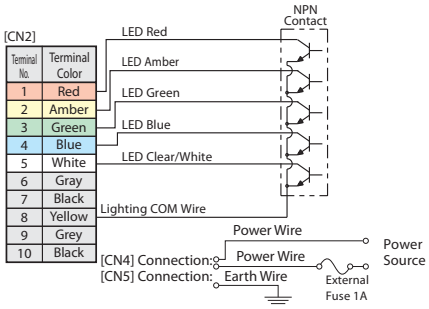


- DC 24V NPN FB Type

[CN2]

| Terminal No. | Terminal Color |
|---|---|
| 1 | Red |
| 2 | Amber |
| 3 | Green |
| 4 | Blue |
| 5 | White |
| 6 | Gray |
| 7 | Black |
| 8 | Yellow |
| 9 | Grey |
| 10 | Black |

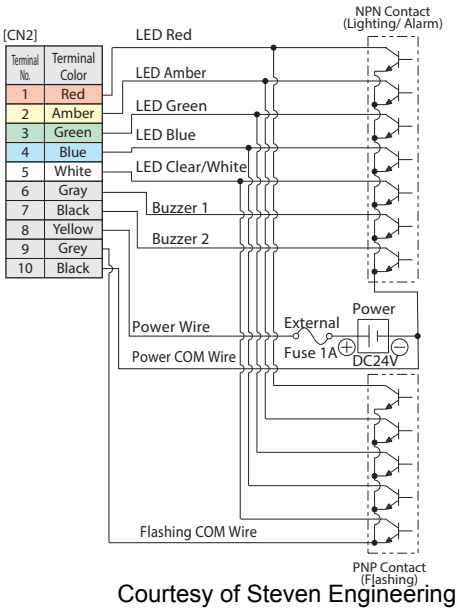


- DC 24V PNP FB Type

[CN2]

| Terminal No. | Terminal Color |
|---|---|
| 1 | Red |
| 2 | Amber |
| 3 | Green |
| 4 | Blue |
| 5 | White |
| 6 | Gray |
| 7 | Black |
| 8 | Yellow |
| 9 | Grey |
| 10 | Black |

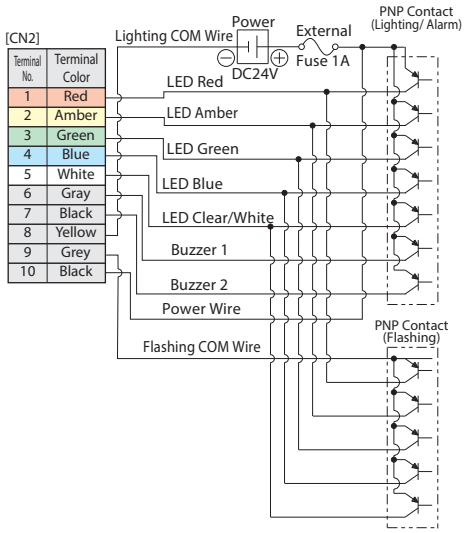


- AC Power NPN FB Type

[CN2]

| Terminal No. | Terminal Color |
|---|---|
| 1 | Red |
| 2 | Amber |
| 3 | Green |
| 4 | Blue |
| 5 | White |
| 6 | Gray |
| 7 | Black |
| 8 | Yellow |
| 9 | Grey |
| 10 | Black |

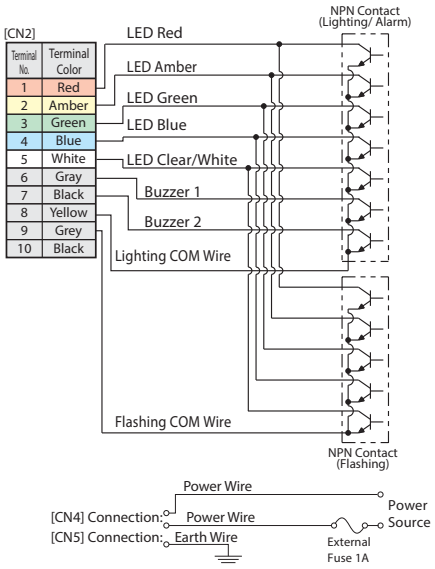




Courtesy of Steven Engineering, Inc. - (800) 258-9200 - sales@steveneng.com - www.stevenengineering.com

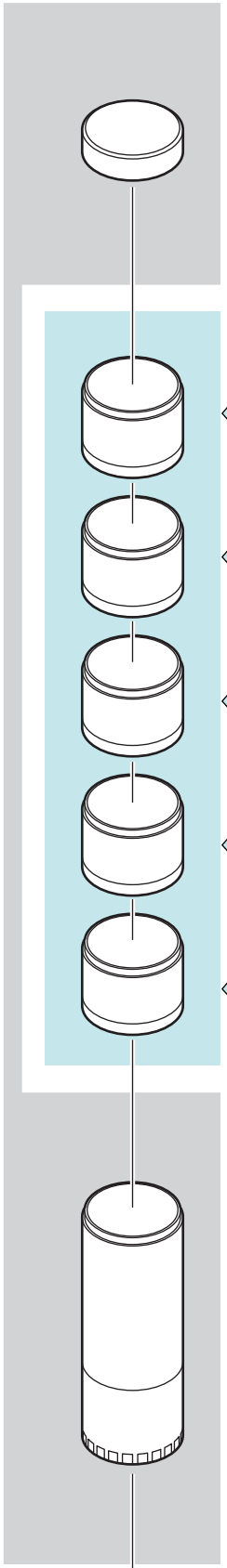

## Voice and Sound Module

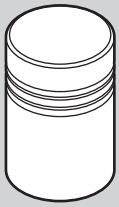

| | |
|---|---|
| **Model** | LU7-V1 |
| **Type** | Voice Synthesizer |
| **Rated Voltage** | DC 24V |
| **Power Consumption** | 3.5W |
| **Mass (±10%)** | 170g |

## LED Units

| | | | | | |
|---|---|---|---|---|---|
| **Model** | LU7-E-R | LU7-E-Y | LU7-E-G | LU7-E-B | LU7-E-C |
| **Unit Color** | ● | ● | ● | ● | ○ |
| **Rated Voltage** | DC 24V | | | | |
| **Operating Voltage Range** | DC 21.6 ~ 26.4V | | | | |
| **Current/Power Consumption** | 52mA/1.25W | | 42mA/1.0W | | |
| **Operating Temperature Range** | -30℃ ~ +60℃ | | | | |
| **Mass (±10%)** | 60g | | | | |

## LED Strobe Module

| | | | | | |
|---|---|---|---|---|---|
| **Model** | LU7-XE-R | LU7-XE-Y | LU7-XE-G | LU7-XE-B | LU7-XE-C |
| **Unit Color** | ● | ● | ● | ● | ○ |
| **Rated Voltage** | DC 24V | | | | |
| **Power Consumption** | 290mA | 290mA | 140mA | 270mA | 280mA |
| **Mass (±10%)** | 70g | | | | |

● RED ● AMBER ● GREEN ● BLUE ○ CLEAR/WHITE

## BASE Units

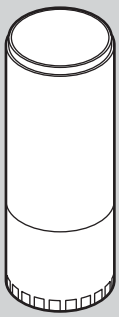

**Standard Body**

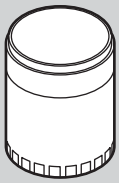

**Short Body**

| | | | | | |
|---|---|---|---|---|---|
| **Model** | LU7-02S | LU7-02 | LU7-02FB | LU7-M2 | LU7-M2FB |
| **Color** | ○ ● ● | | | | |
| **Standard Body/Short Body** | Short | Standard | | Standard | |
| **Rated Voltage** | DC 24V | | | AC 100～240V (50/60Hz) | |
| **Operating Voltage Range** | DC 21.6 ~ 26.4V | | | AC 90～250V (50/60Hz) | |
| **Alarm** | - | | *Buzzer 1 / *Buzzer 2 | - | *Buzzer 1 / *Buzzer 2 |
| **Current Consumption** | - | | 50±10mA / 24±10mA | - | 50±10mA / 24±10mA |
| **Power Consumption** | - | | 1.2±0.25W / 0.58±0.25W | - | 1.8±0.25W / 1.3±0.25W |
| **Sound Level** | - | | Max:90±5dB (at 1m) / Min:70dB or Less (at 1m) | - | Max:90±5dB (at 1m) / Min:70dB or Less (at 1m) |
| **Flashing Cycle** | - | | 60±12 flashes per minute | - | 60±12 flashes per minute |
| **Operating Temperature Range** | -30℃ ~ +60℃ | | | -25℃ ~ +55℃ | |
| **Mounting Direction** | Upright, Indoor only | | | Upright, Indoor only | |
| **Protection Rating** | IP65 (IP66 with Cable Gland supplied by user) | | | | |
| **Mass (±10%)** | 150g | 250g | 280g | 310g | 340g |
| **Open Collector Type** | PNP/NPN | | | NPN | |

* Buzzer 1 : Continuous Sound **Buzzer 2 : Intermittent Sound

○ Ivoly White ● Silver Color ( U ) ● Black ( K )

**Optional Parts**



Courtesy of Steven Engineering, Inc. - (800) 258-9200 - sales@steveneng.com - www.stevenengineering.com

## Optional Parts

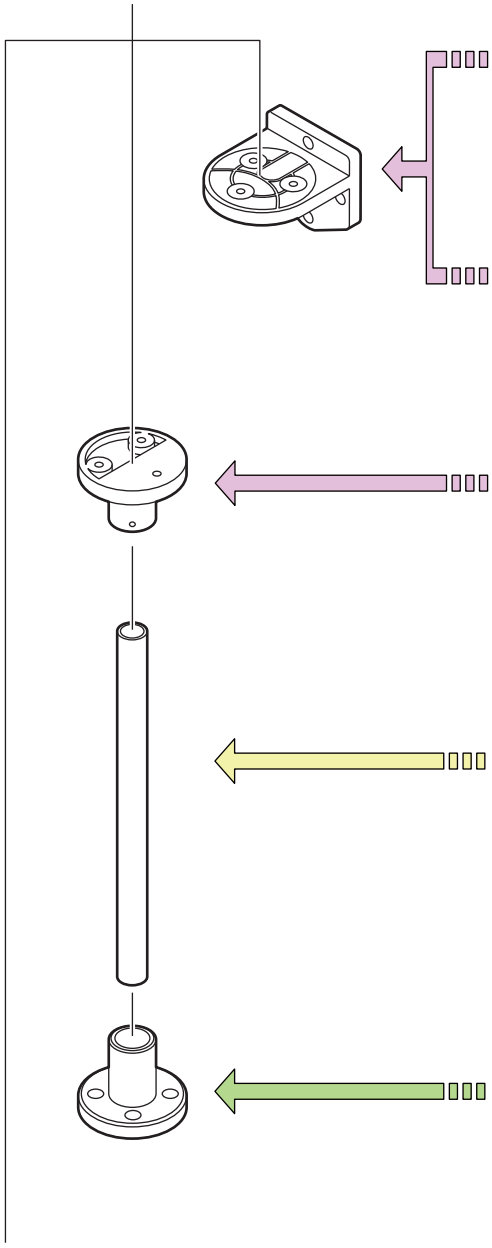

### Wall Mount Bracket

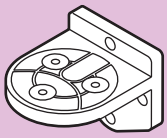

| Model | SZ-018 | SZ-018U | SZ-018K |
|---|---|---|---|
| Color | Ivory White | Silver ( U ) | Black ( K ) |

### Upper Bracket

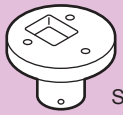

SZ-50NPT(For 1/2” NPT Pole)

### Upper Bracket

| Model | SZ-50-U | SZ-50U-U | SZ-50K-U |
|---|---|---|---|
| Color | Ivory White | Silver (U) | Black (K) |

### Pole

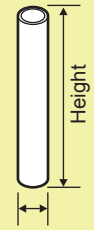


**Steel Pole**

| Model | POLE-800S21 | POLE-300S21 | POLE-100S21 |
|---|---|---|---|
| Height | 800mm | 300mm | 100mm |

**Aluminum Pole**

| Model | POLE-800A21 | POLE-300A21 | POLE-100A21 |
|---|---|---|---|
| Height | 800mm | 300mm | 100mm |

### Mounting Bracket

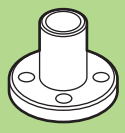

SZ-016A
(For φ21.7mm Pole)

SZ-70-B
(For φ21.7mm Alminium Pole Only)

### Wall Mount Bracket

SZ-020
(For φ21.7mm Pole)

SZ-017
(For φ21.7mm Pole)

## Pre-assembled

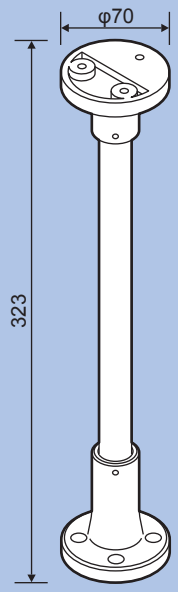


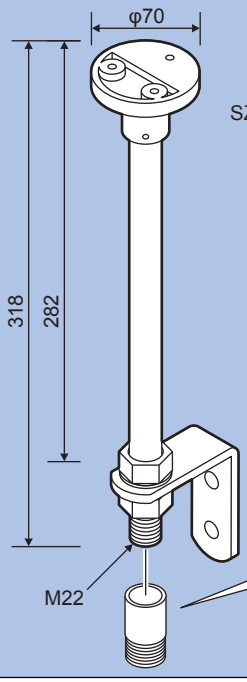


### Adaptor

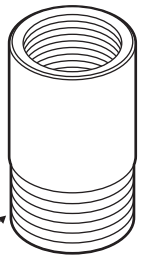

SZ-904
For 3/4” NPT



Courtesy of Steven Engineering, Inc. - (800) 258-9200 - sales@steveneng.com - www.stevenengineering.com

# LU7-XE

## Signal Tower

LED

Φ70

## Stackable LED strobe module saves energy and requires low maintenance.

FEATURES

- Application* can be used with the LU7 Series Signal Tower.
- A visually stunning double-flash light pattern for immediate attention.
- Incorporates super-bright LED technology for enhanced visibility.
- Easily stackable and interchangeable, before or after installation.
- Has the CE mark and conforms to the requirements for the EC directive.
- Is UL Listed (File No. E215660) for use with LU7-02 and LU7-02FB.

- (1) For use with LU7-02, LU7-02S, and LU7-02FB bases only.
  Note: When using with LU7-02FB, the module should be controlled by the continuous common wire.

Brightness Comparison

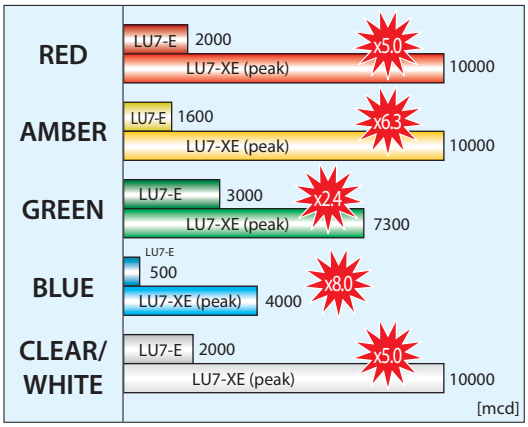


## Dimensions

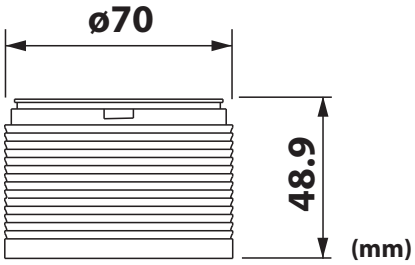


## Specifications

LU7 LED Strobe Units**

| Model | LU7-XE-R | LU7-XE-Y | LU7-XE-G | LU7-XE-B | LU7-XE-C |
|---|---|---|---|---|---|
| Unit Color | LED Unit Red | LED Unit Amber | LED Unit Green | LED Unit Blue | LED Unit Clear/White |
| Rated Voltage | DC 24V | | | | |
| Current Consumption | 290mA | | 140mA | 270mA | 280mA |
| Mass (±10%) | 70g | | | | |

**Operates with LU7-02, LU7-02S, and LU7-02FB bases only. When using with LU7-02FB, the module should be controlled by the continuous common wire.



Courtesy of Steven Engineering, Inc. - (800) 258-9200 - sales@steveneng.com - www.stevenengineering.com

MEMO

For more details, visit our website at http://www.patlite.com



Courtesy of Steven Engineering, Inc. - (800) 258-9200 - sales@steveneng.com - www.stevenengineering.com

# LS7

## Signal Tower

RoHS

LED

2 Alarm Sounds (FB Type)

90dB at 1m (FB Type)

IP65 (B Type:IP54)

Φ70

NPN/PNP Open-collector

Off-white Color Body without Buzzer

Off-white Color Body with Buzzer

Black Color Body without Buzzer

Black Color Body with Buzzer

Silver Color Body without Buzzer

Silver Color Body with Buzzer

# New concept!
# Smart & smooth signal light body which improves harmony with equipment.

## How to Order

LED Signal Tower LS7-①02②③④W⑤–⑥

① No. of LIghting Units
3:3 Tiers 5:5 Tiers

② Body Color
Blank: Off-white
D: Dark Gray
S: Silver

③ Lighting
Blank: Illumination Only
B: Illumination/Flashing

④ Alarm
Blank: No Alarm
B: Alarm

⑤ Wiring
C: M12 Connector
H: Lead Wires*

⑥ LED Color
R: Red
Y: Amber
G:Green
B:Blue
C: Clear/White
N:Blank

Ex.: LS7-302WC-RYGNN
Body Color: Off-white
Lighting: Illumination
Alarm: None
Wiring: M12 Connector
LED Colors: Red, Amber, Green, (Blank), (Blank)

* F type models come with two alarms and are only available with Lead Wire and requires an 'FBWH' part no.
* C type models (M12 Connector type) are only available with a continous sound alarm.

## Specifications

| Model | Number of Lighting Units | Body Color | Rated Voltage | Mounting | Rated Current Consumption | Maximum Rated Current | Maximum Sound Pressure | Operating Temperature Range | Protection Rating | Mass: Lead-wire Type (H) | | Mass: M12 Connector Type (C) | |
|---|---|---|---|---|---|---|---|---|---|---|---|---|---|
| | | | | | | | | | | Illumination (No Mark) | Illumination/Flash/ 2 Alarms (FB) | Illumination (No Mark) | 1 Alarm (B) |
| LS7-302 | 3 Tiers | Off-white (Blank)<br>Dark Grey (D)<br>Silver (S) | DC 24V (±10%) | Direct (Indoors Only) | Red: 20mA<br>Amber, Green, Blue, Clear/White 30mA<br>Alarm 40mA | Red: 35mA<br>Amber, Green, Blue, Clear/White 40mA<br>Alarm 55mA | Buzzer1 ab. 82dB Lead-wire Type (Intermittent Beep1) M12 Connector Type (Continuous Beep)<br>Buzzer2 ab. 85dB Lead-wire Type (Intermittent Beep2) M12 Connector Type (None) | -30°Cto+60°C (Less than 85% RH) | Illumination Type: IP65*<br>Buzzer Type: IP54 | 280g ±10% | 370g ±10% | 260g ±10% | 320g ±10% |
| LS7-502 | 5 Tiers | | | | | | | | | | | | |

* IP67 available by special order



Courtesy of Steven Engineering, Inc. - (800) 258-9200 - sales@steveneng.com - www.stevenengineering.com

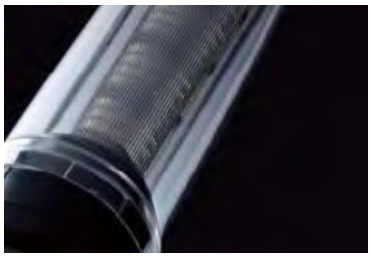

## A smooth-surfaced body without any metal exposed

By changing the surface of the body into a smoother form, the adhesion of water and dust is reduced. Also, the structure does not have screws, shafts, etc., exposed, which gives comfort for applications in the lithium ion battery manufacturing and food processing industries. And, with the outer lens structure, the risk of environmental stress cracks due to oil mist is reduced. The lens cover is made of shock-resistant polycarbonate.

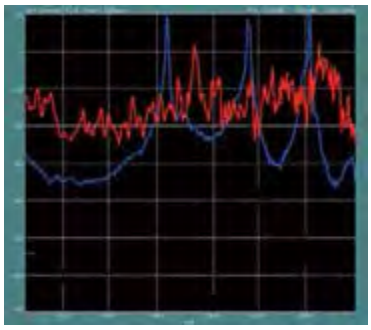

## A sound heard throughout various environments

In addition to the existing lead wire, M12 connector quick disconnect is also available. Moreover, when moving to carry and to go out of the device, it is possible to detach it easily with the M12 connector.

Speaker Horn (Alarm Type)

Frequency graph of a metal-working shop sound mixed with buzzer2 alarm. (Inter-corporate Measurement)

* Buzzer1 (H type or C type) is measured at 2000Hz.

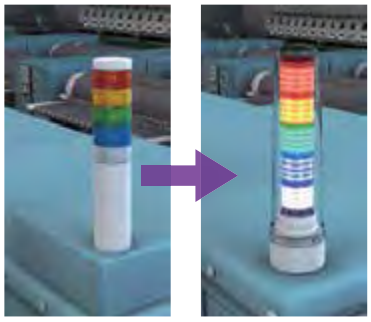

## Easy attachment, no need for Relay Box

In addition to the conventional three-bolt installation, a two-bolt installation from the upper mount has been added to help make a smoother installation. Therefore, by using the mount as a relay box, it reduces the manufacturing cost for an extra relay box, which used to be a necessity up until now.

Fixed Mounting Style

## M12 Connector Wiring & Tiered Construction

The stackable design and M12 connector quick disconnect (Cable Sold Separate) can drastically reduce labor and time. Moreover, the disconnection and reconnection of the body when removing it to relocate a machine has become smoother.

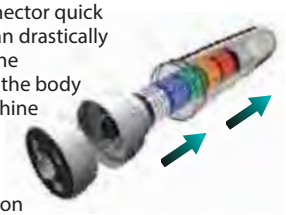

Stackable Construction

## High-contrast Visibility

With the adoption of an inner lens, the LED emits a more efficient light. Moreso, the contrast is increased when the Signal Tower lights up or flashes, with a distinguishable signal color which remarkably improves visibility.

## Remarkable display in ANY environment

The LS7 has passed various tests for water resistance, dust, temperature, and variable vibration frequency tests, etc., so that it can endure various environments.

## All-plastic Bracket

Like the body, the smooth-shaped platform bracket won't collect water or dust. Since no metal parts like screws and shafts are exposed, worries of food tampering can be put to rest in the food process lines.

Courtesy of Steven Engineering, Inc. - (800) 258-9200 - sales@steveneng.com - www.stevenengineering.com

# Dimensions

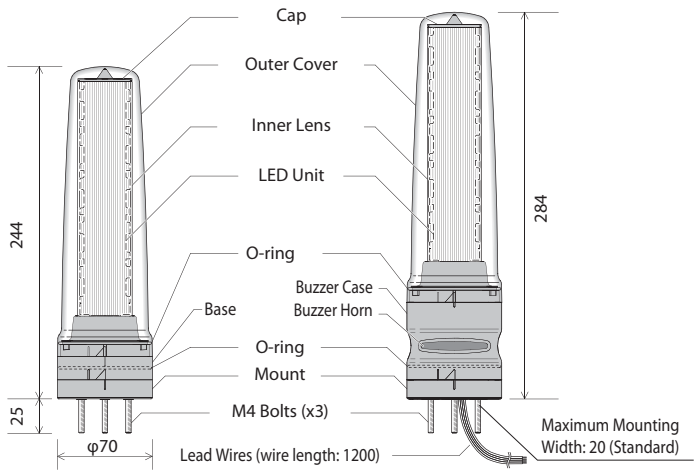


Product Front (Buzzer Horn Direction)

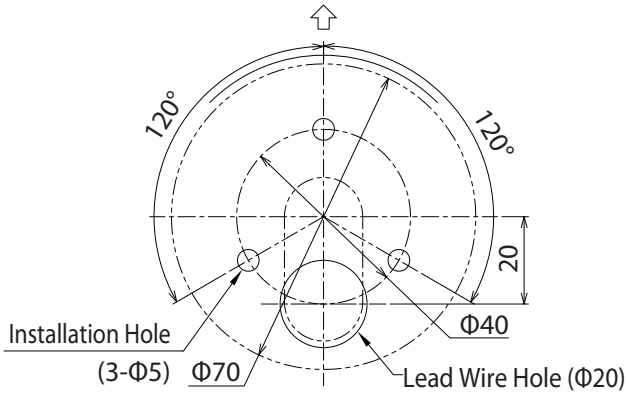


# Optional Parts

Like the body, the smooth-shaped platform bracket won't collect water or dust. Since no metal parts like screws and shafts are exposed, worries of food contamination can be put to rest in food processing.

Platform Bracket SZ-100

Wall Mounting Bracket SZ-110

Multi-mount Bracket SZ-130

Multi-mount Bracket SZ-130 Installation DImiensions

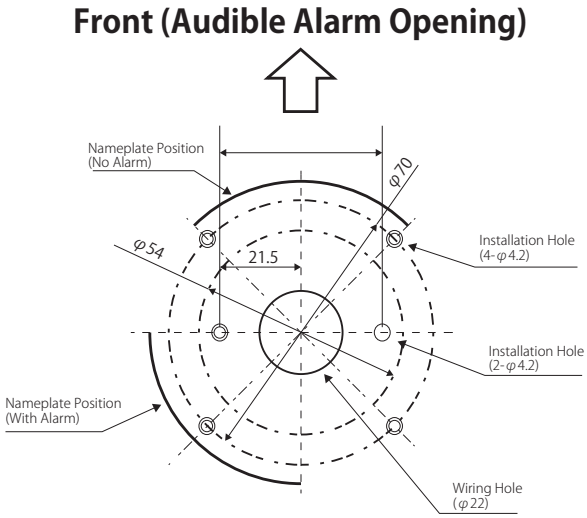


M12 Connector & Cable
(Manufactured by the OMRON Corp.)
SZ-120-02 Cable Length 2m (XS2F-D821-DH0-R)
SZ-120-05 Cable Length 5m (XS2F-D821-GH0-R)
SZ-120-10 Cable Length 10m (XS2F-D821-JH0-R)

* Only for connecting to the LS7.

## Replacement Parts

Outer Cover for LS7*

Material: Polycarbonate

O-ring for LS7

Material: Silicone

Mount Cover for LS7
(Accessory)

Material: Silicone

Courtesy of Steven Engineering, Inc. - (800) 258-9200 - sales@steveneng.com - www.stevenengineering.com

# Wiring

## Contact Relay

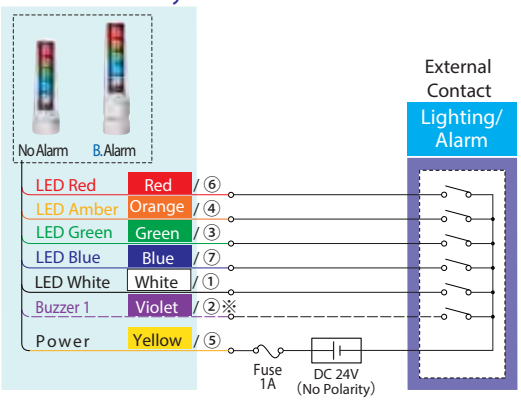


## Contact Relay

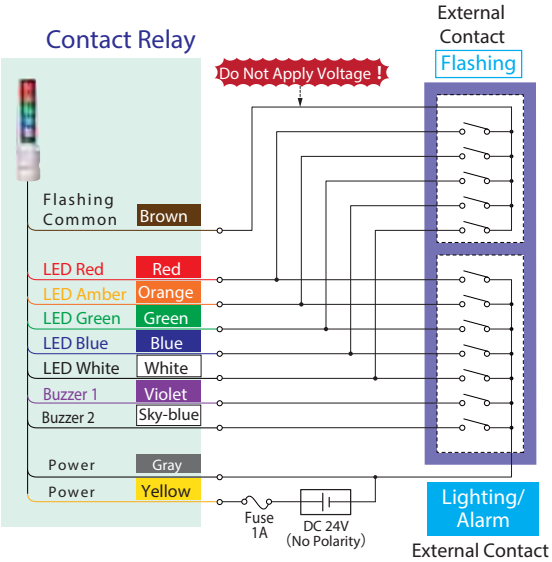


## PLC (NPN Transistor)

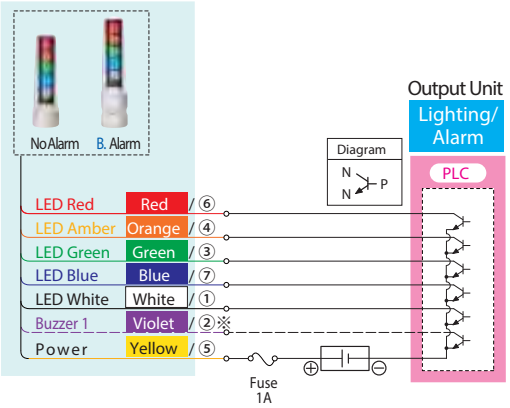


## PLC (NPN Transistor)

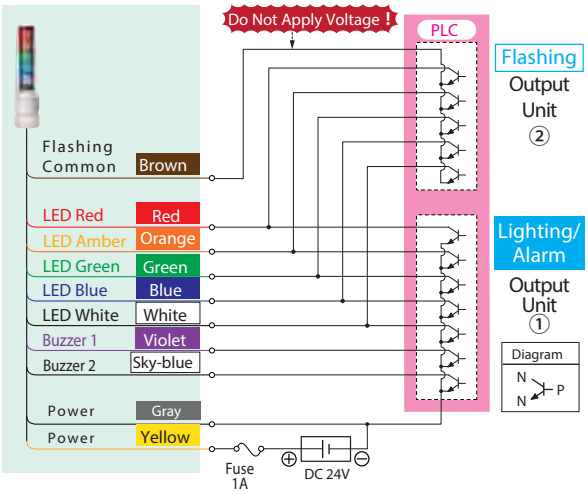


## PLC (PNP Transistor)

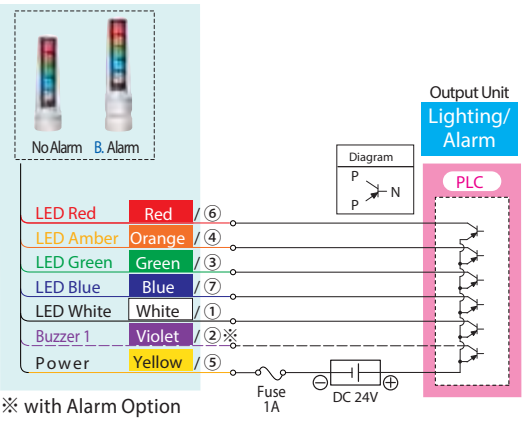


※ with Alarm Option

## PLC (PNP Transistor)

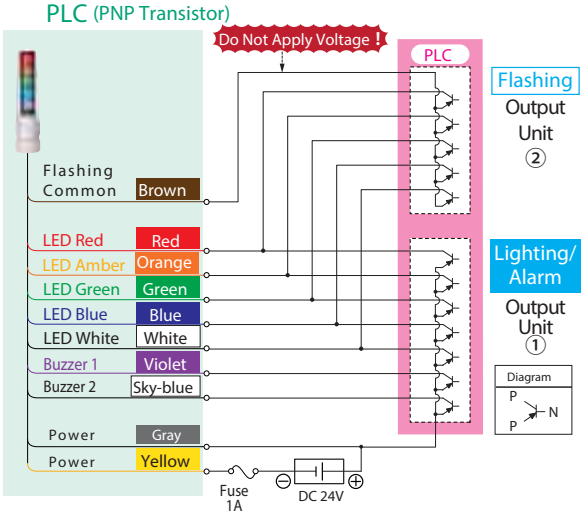


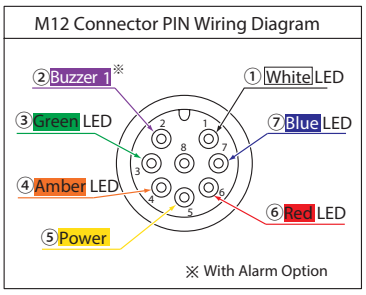


Note: When connecting the PLC outputs for illumination and flashing functions, the wiring (Common Wires) has to be separate between the flashing and non-flashing circuits.



Courtesy of Steven Engineering, Inc. - (800) 258-9200 - sales@steveneng.com - www.stevenengineering.com

# WE/WEP

## Signal Tower

RoHS CE UL

LED

2 Alarm Sounds (FB Type)

90dB at 1m (FB Type)

IP65 (FB Type: IP54)

NPN/PNP Open-collector

# Ultra slim half-moon shaped Signal Tower offers seamless integration with most equipment.

FEATURES

- Clear vertical-cut lens for enhanced illumination over a wide perspective.
- Has an optional built-in audible alarm (FB type) with an output of 90dB (at 1m).
- Installation can be vertical or horizontal.
- Two body color selections of chrome plated or ivory white.
- Lens made of superior impact and heat resistant polycarbonate resin for superior durability and enhanced illumination.
- Both NPN and PNP Compatible for direct connection to a PLC (24V DC ONLY)
- Two lighting patterns of flashing and continuous lighting.
- Dust and water resistance rating of IP65 (except for FB type: IP54).
- Available colors are in Red, Amber, Green, Blue, and Clear/White.
- Has the CE mark and conforms to the requirements for the EC directive.
- Is a UL Recognized Component (File No. E215660).

### 37.5mm Super-thin Design!

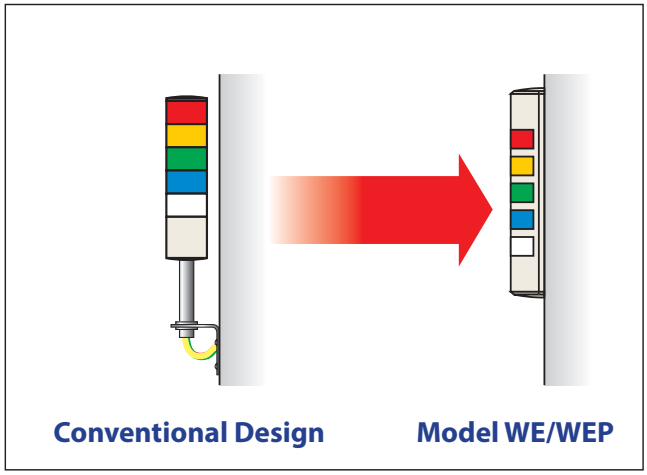


Patlite has perfected a 37.5mm-thin design that significantly enhances integration with the equipment as a built-in signal system.

### Exclusively New LED Lighting Design

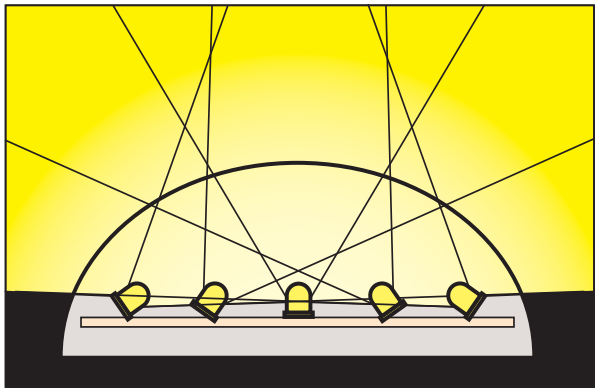

Patlite has created a revolutionary patented lighting design in which multiple LEDs project light across a broad peripheral area, ensuring equal intensity at the sides as well as the front. This design, with its side-projection technology, is a unique achievement in signal light design.



Courtesy of Steven Engineering, Inc. - (800) 258-9200 - sales@steveneng.com - www.stevenengineering.com

## Dimensions

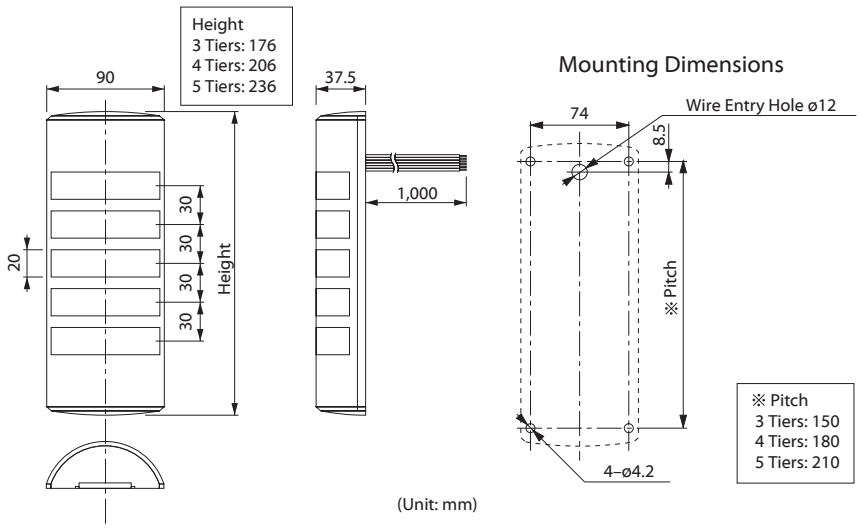

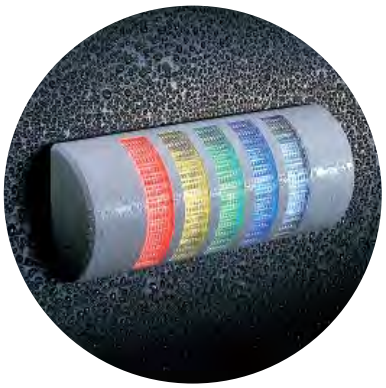

**IP65 construction is safe for installation in damp locations and dusty factory environments.**

## How to Order

**WEP-302FB-RYG**

Body Color
WE: Chrome-plated
WEP: Ivory White

Tiers
3~5

Rated Voltage
02: AC/DC 24V

Type
Blank: Continuous Lighting
FB: Flashing/ Alarm

Color
R: Red
Y: Amber
G: Green
B: Blue
C: Clear/White
(Top to bottom)

## Specifications

| Stack Number | Model | Rated Voltage | Power Consumption | Mass |
|---|---|---|---|---|
| 3 Tiers | WE(P)-302 | AC/DC 24V | 1.7W | 260g |
| | WE(P)-302FB | | 2.7W | 300g |
| 4 Tiers | WE(P)-402 | | 2.0W | 310g |
| | WE(P)-402FB | | 3.2W | 350g |
| 5 Tiers | WE(P)-502 | | 2.7W | 310g |
| | WE(P)-502FB | | 3.7W | 350g |

| Alarm Sounds | Lead Wire Color |
|---|---|
| Buzzer 1 | Purple |
| Buzzer 2 | Skyblue |

Signal Line voltage and current per LED Module

| Model | Rated Voltage | Signal Line Voltage | LED | | Alarm | |
|---|---|---|---|---|---|---|
| | | | Signal Line Current | | Signal Line Current | Inrush Current |
| | | | R, Y | G, B, C | | |
| WE/WEP | AC/DC 24V | AC/DC 24V | 30mA | 25mA | 40mA | 250mA |



Courtesy of Steven Engineering, Inc. - (800) 258-9200 - sales@steveneng.com - www.stevenengineering.com

# Wiring

- AC/DC 24V Lighting Type

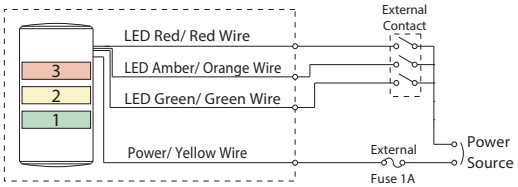


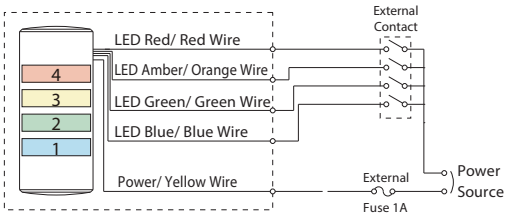


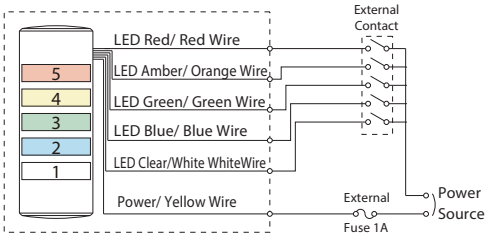


- AC/DC 24V Lighting/Flashing Type

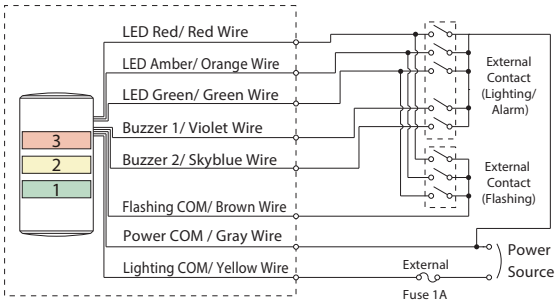


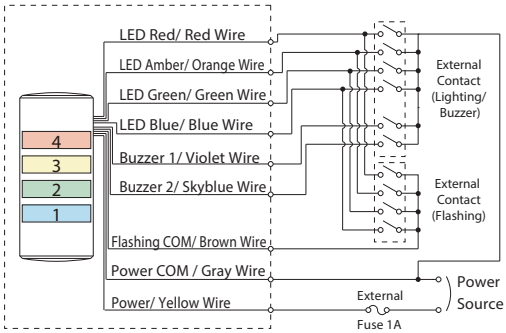


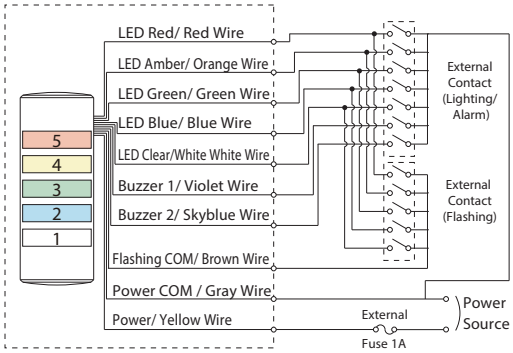


- DC 24V NPN Type

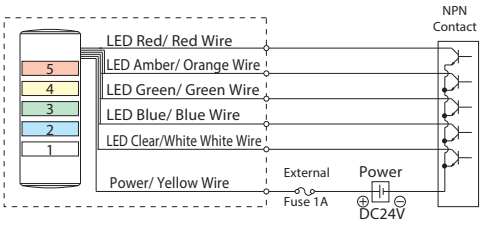


- DC 24V PNP Type

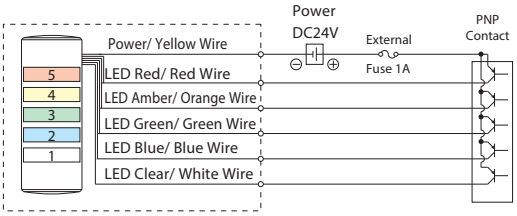


- DC 24V NPN FB Type

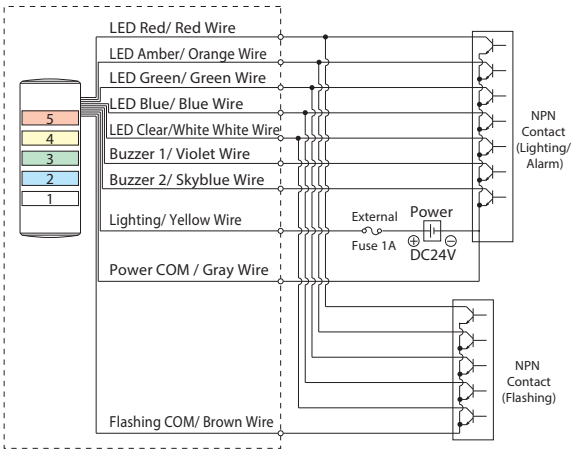


- DC 24V PNP FB Type

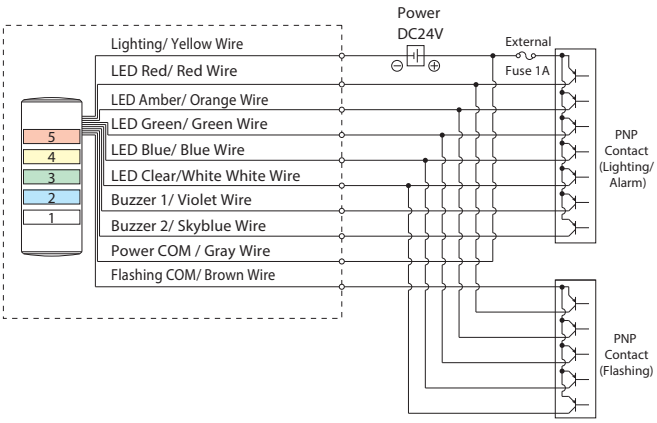




Courtesy of Steven Engineering, Inc. - (800) 258-9200 - sales@steveneng.com - www.stevenengineering.com

# WME-A

## Signal Tower

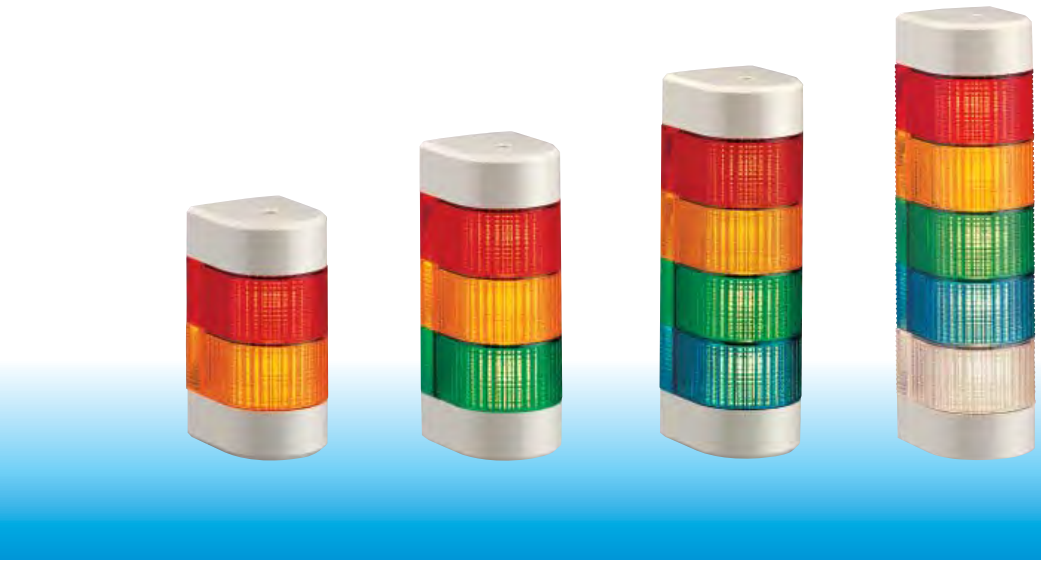

LED

2 Alarm Sounds (FB Type)

90dB at 1m

IP65 (FB Type:IP54)

W70 D80

NPN/PNP Open-collector

## Exclusive wall-mount design saves space and enhances its integral appearance.

Interchangeable LED Modules

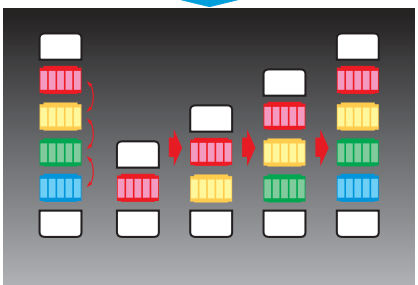

**LED Tiers are changeable, even after installation.**

**However, the Center Shaft also has to be purchased.**

FEATURES

- Built-in audible alarm (FB type)
- Volume output of up to 90dB (at 1m).
- Easy vertical or horizontal installation when used with mounting brackets.
- Interchangeable Modules need no re-wiring, even after installation.
- Install as an option with a compatible household switch box (JISC 8336 with 82.5m pitch).
- Main body is made of ABS resin.
- Lens is made with superior impact and heat resistant polycarbonate resin for superior durability and illumination.
- Compatible for use with NPN or PNP controlled inputs (24V DC type ONLY).
- Available Colors are in Red, Amber, Green, Blue, and Clear/White.
- Has the CE mark and conforms to the requirements for the EC directive.
- Is a UL Recognized Component (File No. E215660).

AVAILABLE BY SPECIAL ORDER

- 1 Tier Type
- Individual module control for single color

### 5 "Super Bright" LED Colors to choose from!

Red Amber Green Blue Clear/White

### Exclusively New LED Lighting Design

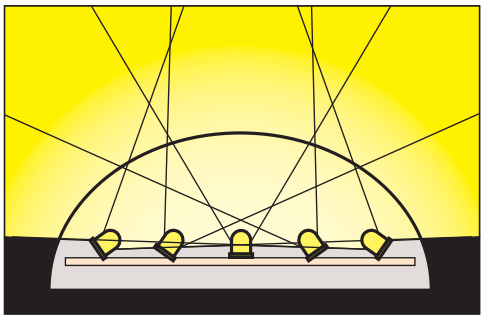

Patlite has created a revolutionary patented lighting design in which multiple LEDs project light across a broad peripheral area, ensuring equal intensity at the sides as well as the front. This design, with its side-projection technology, is a unique achievement in signal light design.



Courtesy of Steven Engineering, Inc. - (800) 258-9200 - sales@steveneng.com - www.stevenengineering.com

## How to Order

**WME-402AFB-RYGB**

- Tiers: 2~5
- Rated Voltage: 02: AC/DC 24V; M2: AC 100~240V
- Type: Blank: Continuous Lighting; FB: Flashing / Alarm
- Color: R: Red; Y: Amber; G: Green; B: Blue; C: Clear/White (Top to bottom)

## Specifications

| Stack Number | Model | Rated Voltage | Power Consumption | Mass |
|---|---|---|---|---|
| 2 Tiers | WME-202 | AC/DC 24V | 2.7W | 390g |
| | WME-2M2A | AC 100 - 240V | 4.6W | 460g |
| 3 Tiers | WME-302 | AC/DC 24V | 3.3W | 470g |
| | WME-3M2A | AC 100 - 240V | 6.0W | 540kg |
| 4 Tiers | WME-402 | AC/DC 24V | 4.4W | 550g |
| | WME-4M2A | AC 100 - 240V | 8.0W | 620g |
| 5 Tiers | WME-502 | AC/DC 24V | 5.5W | 630g |
| | WME-5M2A | AC 100 - 240V | 10.0W | 700g |

Signal Line voltage and current per LED Module

| Model | Rated Voltage | Signal Line Voltage | LED Signal Line Current | | Alarm | |
|---|---|---|---|---|---|---|
| | | | R, Y | G, B, C | Signal Line Current | Inrush Current |
| WME-A | AC/DC 24V | AC/DC 24V | 35mA | 50mA | 40mA | 250mA |
| | AC 100V - 240V | DC 24V | | | | |

## Dimensions

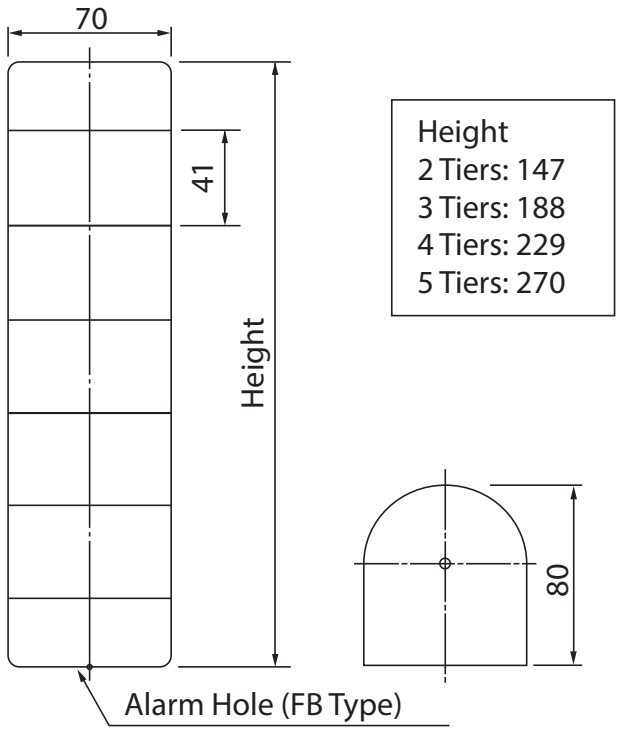


Height
2 Tiers: 147
3 Tiers: 188
4 Tiers: 229
5 Tiers: 270

### Mounting Dimensions

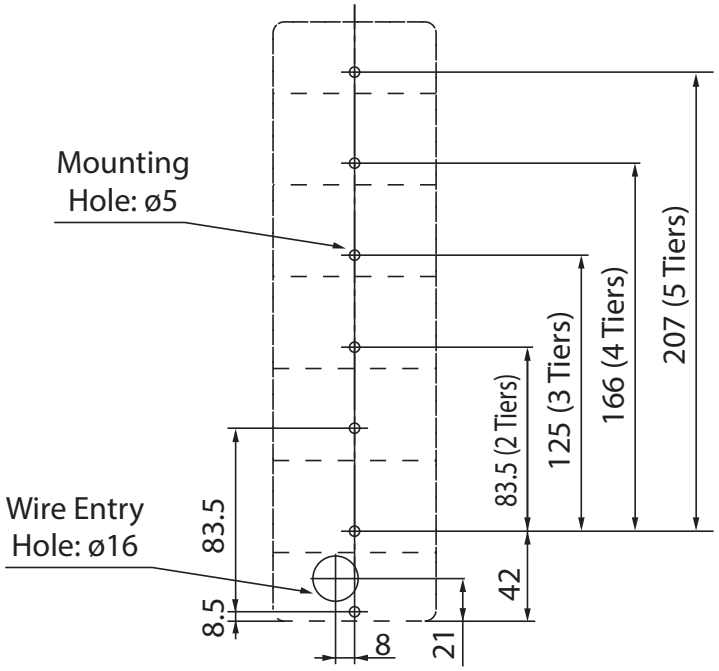


(Unit: mm)

- The LED Colors are stackable, even after installation.
  However, the applicable Center Shaft and backplate needs to be purchased.
- Install with the alarm in the downard direction in order to preserve the IP54 rating.



Courtesy of Steven Engineering, Inc. - (800) 258-9200 - sales@steveneng.com - www.stevenengineering.com

# Wiring

- AC/DC 24V Lighting/Flashing Type

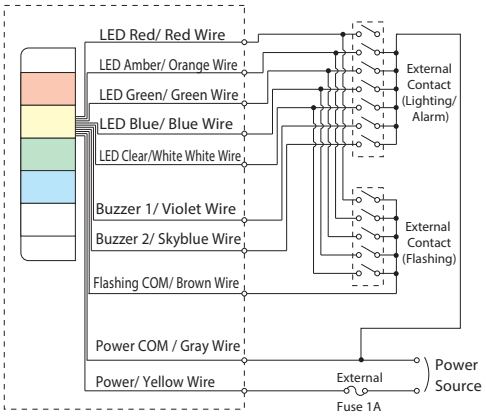


- AC Power Lighting/Flashing Type

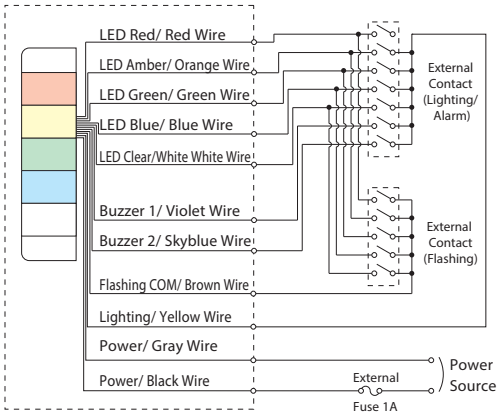


- DC 24V NPN Type

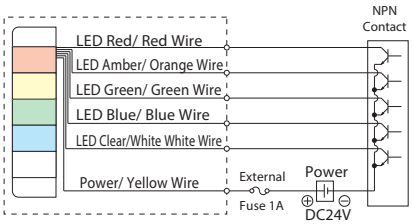


- AC Power NPN Type

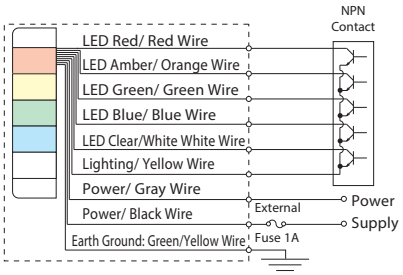


- DC 24V NPN FB Type

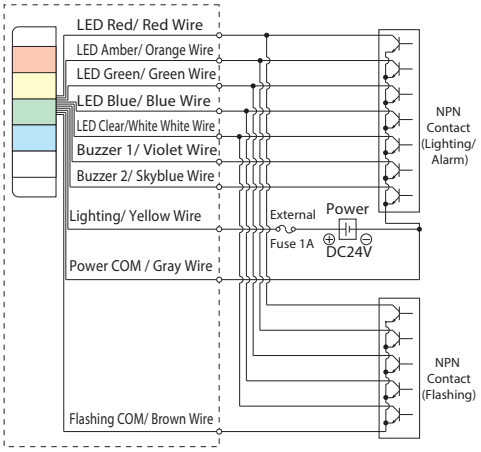


- AC Power NPN FB Type

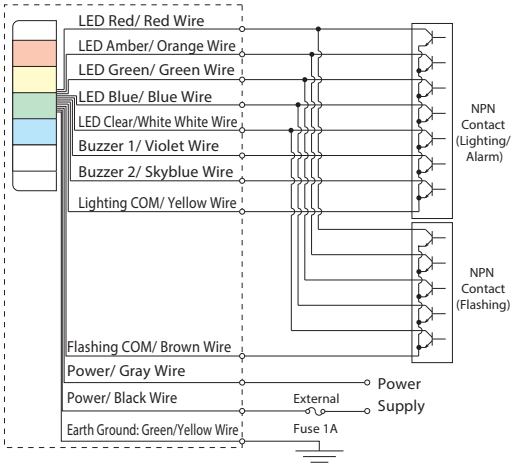


- DC 24V PNP Type

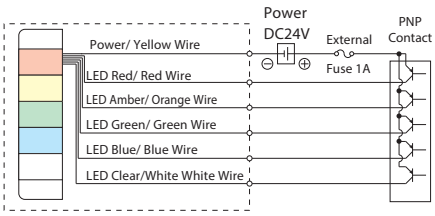


- DC 24V PNP FB Type

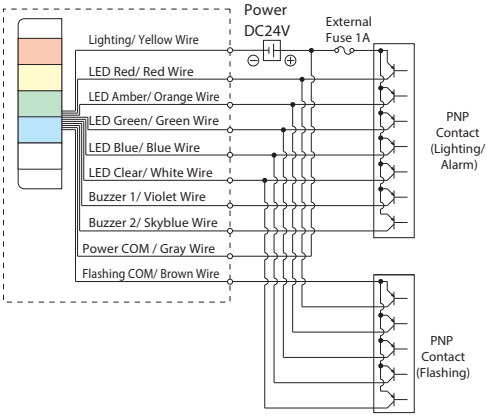




Courtesy of Steven Engineering, Inc. - (800) 258-9200 - sales@steveneng.com - www.stevenengineering.com

# LGE

## Signal Tower

ALARM

LED

1 Alarm Sound (FB Type)

85dB at 1m

IP54

Φ100

NPN/PNP Open-collector

# Large Signal Tower featuring enhanced visibility and downward illumination, designed for large machines.

Triple Reflection System

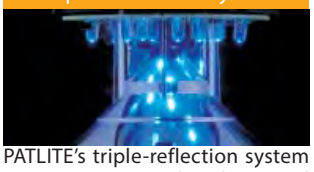

PATLITE's triple-reflection system creates an even brighter and distinctive illumination with its exclusive hybrid prism-cut lens for 5 color LED module variations.

Interchangeable LED Modules

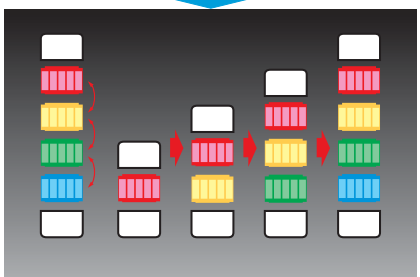

**LED Tiers are changeable, even after installation.**

**Note: Shafts that match the number of tiers also has to be purchased.**

FEATURES

- PATLITE's large prism cut lens to enhance illumination in the downward direction. (Lens Size: φ100mm x 60mm high)
- The FB type offers a flashing and continuous lighting pattern.
- A built-in buzzer (FB type) has a sound of up to 85dB (at 1m).
- Direct mount Installation.
- Interchangeable Modules need no re-wiring, even after installation.
- Lens is made of superior impact and heat resistant polycarbonate resin for superior durability and illumination.
- Both NPN and PNP compatible for the DC24V type; NPN compatible with the AC 100/220V type only.
- Available Colors are in Red, Amber, Green, Blue, and Clear/White.
- Has the CE mark and conforms to the requirements for the EC directive. (for 24V type)

## How to Order (Pre-assembled)

**LGE-402FB-RYGB**

- Tiers: 1~4
- Rated Voltage: 02: AC/DC 24V; 10: AC 100V; 20: AC 220V
- Type: Blank: Continuous Lighting; FB: Flashing/ Alarm
- Color: R: Red; Y: Amber; G: Green; B: Blue; C: Clear/White (Top to bottom)

## How to Order (Module)

Base Unit

**LGEBC- 24 FB**

- Model
- Rated Voltage: 24: AC/DC 24V; 100: AC 100V; 120: AC120V
- Type: Blank: Continuous Light; FB: Flashing/ Alarm

LED Light Module

**LGEM-24- R**

- Model
- Rated Voltage: 24: DC 24V
- Color: R: Red; Y: Amber; G: Green; B: Blue; C: Clear/White

Shafts (One Pair)

**LGSHAFT- 1**

- Tier: 1: 1 Tier; 2: 2 Tiers; 3: 3 Tiers; 4: 4 Tiers



Courtesy of Steven Engineering, Inc. - (800) 258-9200 - sales@steveneng.com - www.stevenengineering.com

**5 "Super Bright" LED Colors to choose from!**

Red Amber Green Blue Clear/White

## Specifications (Pre-assembled)

(No Alarm)

| Light System | Model | Rated Voltage | Power Consumption | Mass |
|---|---|---|---|---|
| 1 Tier | LGE-102 | AC/DC 24V | 2.0W | 0.4kg |
| | LGE-110 | AC 100V | 5.2W | 1.0kg |
| | LGE-120 | AC 220V | | |
| 2 Tiers | LGE-202 | AC/DC 24V | 4.0W | 0.6kg |
| | LGE-210 | AC 100V | 7.7W | 1.2kg |
| | LGE-220 | AC 220V | | |
| 3 Tiers | LGE-302 | AC/DC 24V | 6.0W | 0.8kg |
| | LGE-310 | AC 100V | 10.2W | 1.4kg |
| | LGE-320 | AC 220V | | |
| 4 Tiers | LGE-402 | AC/DC 24V | 8.0W | 0.9kg |
| | LGE-410 | AC 100V | 12.7W | 1.5kg |
| | LGE-420 | AC 220V | | |

Alarm Type (Intermittent Rate: ab. 60 beeps per min)

| Light System | Model | Rated Voltage | Power Consumption | Mass |
|---|---|---|---|---|
| 1 Tier | LGE-102FB | AC/DC 24V | 2.5W | 0.4kg |
| | LGE-112FB | AC 100V | 5.7W | 1.0kg |
| | LGE-120FB | AC 220V | | |
| 2 Tiers | LGE-202FB | AC/DC 24V | 4.5W | 0.6kg |
| | LGE-212FB | AC 100V | 8.2W | 1.2kg |
| | LGE-220FB | AC 220V | | |
| 3 Tiers | LGE-302FB | AC/DC 24V | 6.5W | 0.8kg |
| | LGE-312FB | AC 100V | 10.7W | 1.4kg |
| | LGE-320FB | AC 220V | | |
| 4 Tiers | LGE-402FB | AC/DC 24V | 8.5W | 0.9kg |
| | LGE-412FB | AC 100V | 13.2W | 1.5kg |
| | LGE-420FB | AC 220V | | |

## Specifications (Modules)

| Light Unit | Color | Rated Voltage | Power Consumption |
|---|---|---|---|
| LGEM24-R | RED | AC/DC 24V | 2.0W |
| LGEM24-Y | AMBER | | |
| LGEM24-G | GREEN | | |
| LGEM24-B | BLUE | | |
| LGEM24-C | CLEAR | | |

| Power Unit | Rated Voltage | Operation |
|---|---|---|
| LGEBC-120 | AC 120V | Continuous |
| LGEBC-24 | AC/DC 24V | |
| LGEBC-120FB | AC 120V | Continuous/ Flashing/Alarm |
| LGEBC-24FB | AC/DC 24V | |

| Part No. | Light Units per Base |
|---|---|
| LGSHAFT-1 | 1 |
| LGSHAFT-2 | 2 |
| LGSHAFT-3 | 3 |
| LGSHAFT-4 | 4 |

## Dimensions

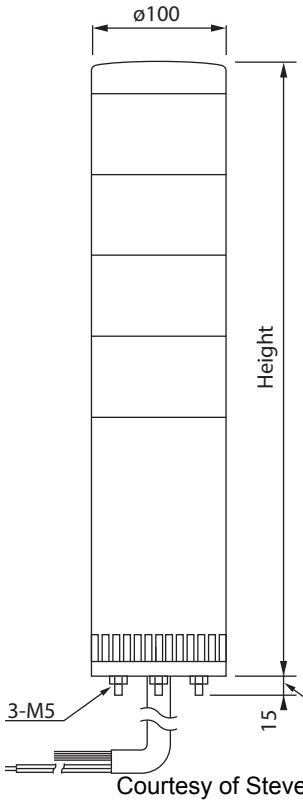


Mounting Dimensions

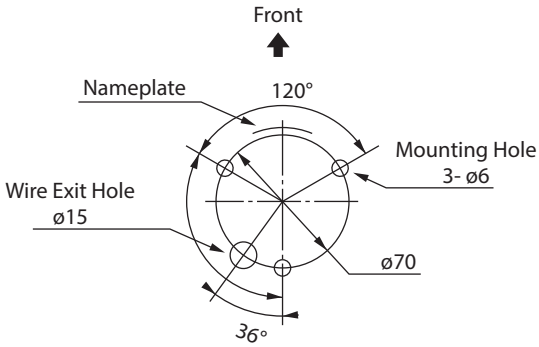


Height
1 Tier: 244
2 Tiers: 305.5
3 Tiers: 367
4 Tiers: 428.5

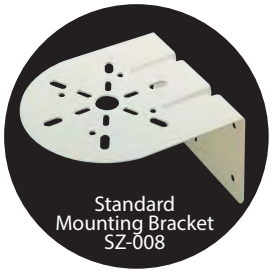


(Unit: mm)

- AC/DC 24V Lighting/Flashing Type

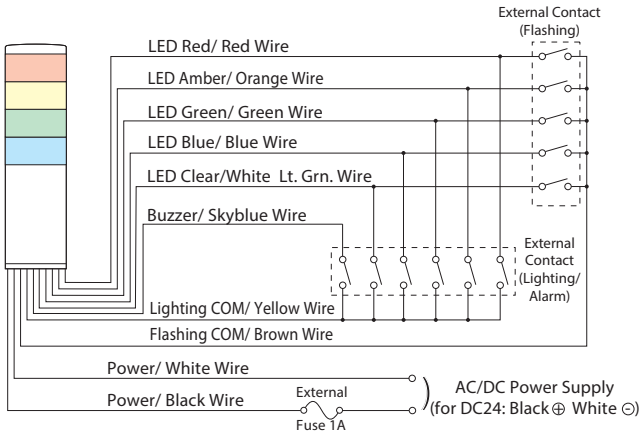


Signal Line voltage and current per LED Module

| Model | Rated Voltage | Signal Line Voltage | LED | Alarm | |
|---|---|---|---|---|---|
| | | | Signal Line Current | Signal Line Current | Inrush Current |
| LGE-A | AC/DC 24V | AC/DC 24V | 90mA | 20mA | 250mA |
| LGE-A | AC 100 | DC 24V | | | |
| LGE-A | AC 220V | | | | |

- DC 24V NPN Type

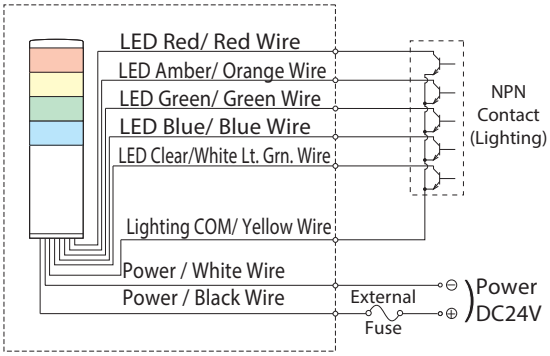


Skyblue and Brown Wire not used

- DC 24V PNP Type

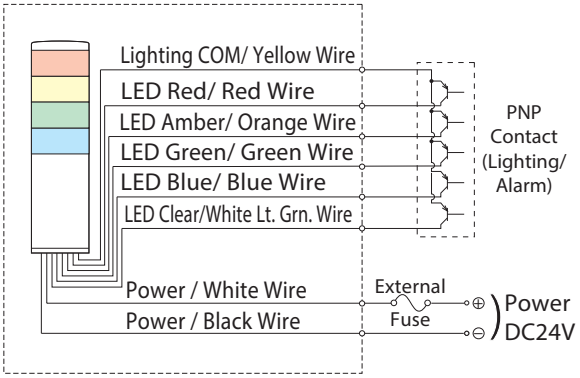


Skyblue and Brown Wire not used

- DC 24V NPN FB Type

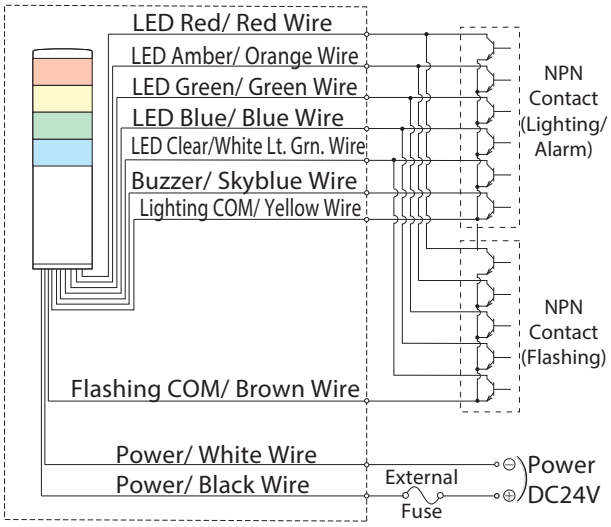


- DC 24V PNP FB Type

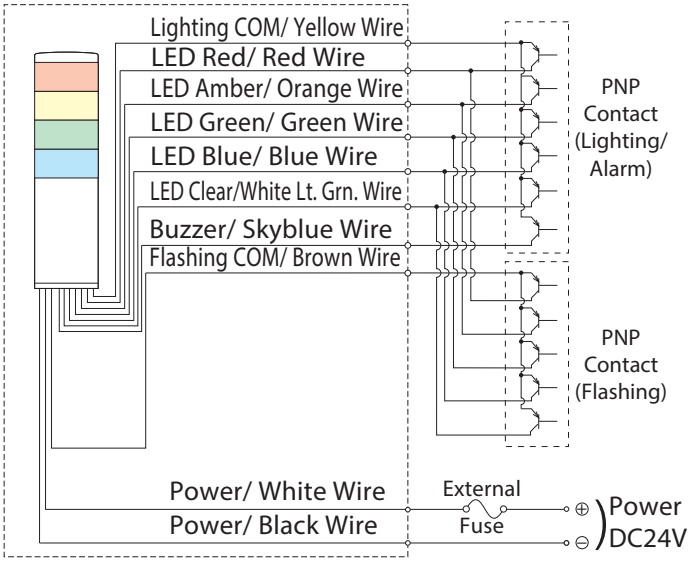




Courtesy of Steven Engineering, Inc. - (800) 258-9200 - sales@steveneng.com - www.stevenengineering.com

MEMO

For more details, visit our website at http://www.patlite.com



Courtesy of Steven Engineering, Inc. - (800) 258-9200 - sales@steveneng.com - www.stevenengineering.com

# WSST

## Manual Control Box

Terminal

WSST Manual Control Box

Desktop

Wall Mounting

Signal Towers, Cables and poles sold sepearately

# PATLITE's WSST Control Box offers excellent all-in-one functionality to meet the growing needs of the manufacturing sector and beyond.

APPLICATIONS

- Workstations and work cells
- Real-time line status indication for managers and line supervisors
- Lean manufacturing, safety and security applications
- Manual assembly operations
- Retail check-out stations
- Call centers

FEATURES

- Universal manual control box for PATLITE LED Signal Towers.
- Sturdy metal construction with 6 color-coordinated push buttons.
- Recommended Signal Towers to choose from are ME; MES; LCE; LE; LES; LME-L; and SZ-60L & SZ-50L Pole Kits
- Install up to 5 Tiers (Red, Amber, Green, Blue and Clear/White).
- Add optional sound alarm or flash functionality (must purchase FB type Signal Towers).
- Various mounting methods include Wall or Desktop installations or as Remote. Recommended Signal Towers for Remote applications (10 ft. cable included) are the LCE-U (with "L" bracket) or LME-U (with flange-mount bracket) Signal Towers.
- Power Supply is included (WSST-KIT).

## How to Order

**WSST-KIT**

Package Description

KIT: Complete Kit includes
- Control Box
- Cable Gland
- 16mm Plug (1pc)
- 22mm Plug (2 pcs)
- Instruction Manual
- Power Supply

CB: Complete Kit (excluding Power Supply)

PS: Power Supply Only

## Specifications

| Rated Voltage | Operating Voltage | Operating Teperature Range | Mounting Location | Mass (±10%) |
|---|---|---|---|---|
| DC 24V (Non-polar) | DC 21.6 -26.4V | $0^{0}$C- +$40^{0}$C (RH less than 90%) | Indoor Only | 1.11kg (Switch Box) |



Courtesy of Steven Engineering, Inc. - (800) 258-9200 - sales@steveneng.com - www.stevenengineering.com

Complete HSST-312 Kit

Control Box

12 in.
Mounting Pole
& Bracket

# HSST

## Manual Indicating Light

LED

# The HSST includes a 3-tiered LED Signal Tower kit as a low- cost complete turn-key solution for manual assembly factories where lean manufacturing practices are dependent upon the overall operation efficiency.

APPLICATIONS

- Assembly workstations
- Safety and security applications
- Call centers
- Retail check stands
- Hospitals
- Airports

FEATURES

- Complete kit includes a 50mm diameter red, amber, green 3-tier LED Signal Tower with 4-foot Cable, poles, three-button control box, AC power adaptor and mounting brackets that can fit onto standard cubicle partitions.
- AC power adapter (UL Listed) rated at 120VAC with 6 ft. cable length is included to allow easy set-up in any location.
- LED light illumination offers maintenance-free operation.
- Optional Extention Cable (Part No. DT-HSST-10) available in 10 ft. segments.
- Mounting screws included with the three-button control box.
- Choice of 3 in. (80mm) or 12 in. (300mm) pole included in set.

## How to Order

**HSST-312**

Package Description

312: Complete Kit including
- 3 button Control Box
- Control Box mounting screws
- 3 tiered Signal Tower (Red, Amber, Green)
- AC 120V Power Adaptor
- 4 ft. cable for Signal Tower
- 3 " Pole (80mm)
- 12" Pole (300mm)
- Pole Mounting Brackets
- Instruction Manual

## Specifications

| Model | Rated Voltage | Tiers | Power Supply |
|---|---|---|---|
| HSST-312 | DC 24V | 3 Tiers (R,Y,G) | AC120V / DC24V (Center Negative) |



Courtesy of Steven Engineering, Inc. - (800) 258-9200 - sales@steveneng.com - www.stevenengineering.com

MEMO

For more details, visit our website at http://www.patlite.com



Courtesy of Steven Engineering, Inc. - (800) 258-9200 - sales@steveneng.com - www.stevenengineering.com

# Signal Lights

Courtesy of Steven Engineering, Inc. - (800) 258-9200 - sales@steveneng.com - www.stevenengineering.com

# NE-24

## LED Dome Signal Light

RoHS CE

LED

IP65

Φ57

NPN/PNP
Open-collector

## NE Series LED Dome Indicator Light; The dome-shaped globe provides increased visibility while the LEDs provide years of maintenance-free operation.

FEATURES

- Enhanced Illumination with the use of long-life, super bright LEDs.
- Low power consumption increases energy efficiency.
- High vibration-resistance and unnecessary bulb replacement makes it maintenance-free.
- Uses a terminal block for easy wiring.
- Applications are suitable for small tooling machines, control panels, etc.
- Available colors are in Red, Amber, Green, Blue, and Clear/White.
- Has the CE mark and conforms to the requirements for the EC directive.

## Dimensions

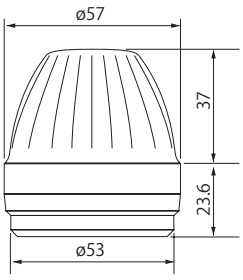


Mounting Dimensions

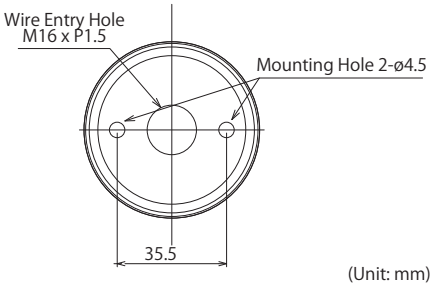


(Unit: mm)

## How to Order

**NE 24 -□**

Model

Rated Voltage
24: DC 24V

Color
R: Red
Y: Amber
G: Green
B: Blue
C: Clear/White

## Specifications

| Model | Color | Rated Voltage | Power Consumption | Operating Temperature Range | Mass |
|---|---|---|---|---|---|
| NE-24-R | RED | DC 24V | 0.63W | -30 C - +50 C | 55g |
| NE-24-Y | AMBER | | | | |
| NE-24-G | GREEN | | 0.56W | | |
| NE-24-B | BLUE | | 0.53W | | |
| NE-24-C | CLEAR/WHITE | | 0.45W | | |

## Wiring

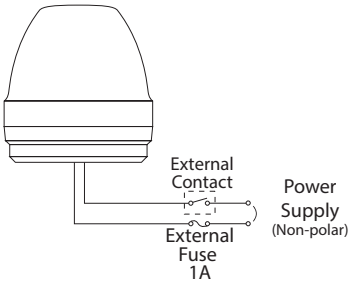




Courtesy of Steven Engineering, Inc. - (800) 258-9200 - sales@steveneng.com - www.stevenengineering.com

# KHE

## LED Multi-signal Light

Optional Rubber Gasket SZ-200A

LED Off with Clear Globe

**LED**

**IP65** with SZ-200A

**Φ100**

**NPN/PNP Open-collector**

# KHE features three flashing patterns for diverse applications.

FEATURES

- Super-bright long life LED's used for three signaling patterns that simulate rotation, strobe, and blinking.
- Enhanced Illumination with the use of long-life, super bright LEDs.
- No motor or bulb replacement makes it Maintenance-free.
- Low power consumption increases energy efficiency.
- Indoor installation can be upright, inverted or sideways; Outdoors is for upright only.
- Available colors are in Red, Amber, Green, and Blue.
- Has the CE mark and conforms to the requirements for the EC directive.
- Is UL Listed (File No. E215660).

AVAILABLE BY SPECIAL ORDER

- Body Color: Silver

## Dimensions

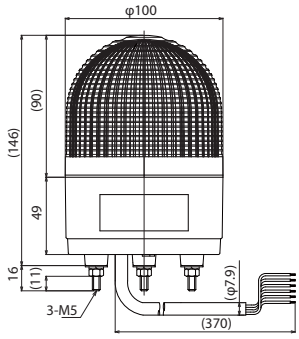


Mounting Dimensions

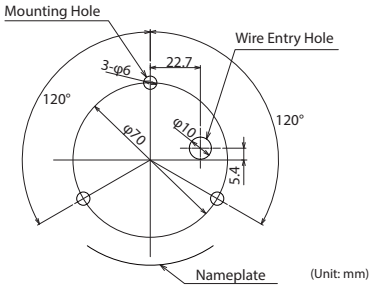


## How to Order

**KHE 24 -□-Z**

- Model: KHE
- Rated Voltage: 24: DC 24V
- Color: R: Red; Y: Amber; G: Green; B: Blue
- Dome: None: Colored; Z: Clear

## Specifications

| Model | Color | Rated Voltage | Power Consumption | Flash Patterns | | | Mass |
|---|---|---|---|---|---|---|---|
| | | | | Flash | Rotation | Strobe | |
| KHE-24 | RED | DC 24V | 8.2W | 55 ±10% fps | 175 ±10% fps | 75 ±10% fps (double-flash) | 450g |
| | AMBER | | | | | | |
| | GREEN | | 10.1W | | | | |
| | BLUE | | 21.6W | | | | |

## Wiring

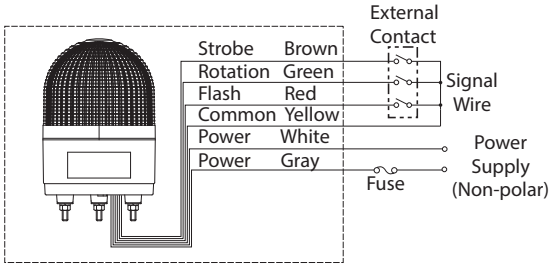




Courtesy of Steven Engineering, Inc. - (800) 258-9200 - sales@steveneng.com - www.stevenengineering.com

# PEW-A/PES-A

## Multi-speed Flashing Signal Light

RoHS

LED

1 Alarm Sound (PEW-B)

85dB at 1m (PEW-B)

IP55*

Φ82

NPN Open-collector

Optional Rubber Gasket SZ-210

* PEW-A: IP54 (IP23 with side-wire exit mounting)
* PES-A: IP55 with the optional rubber gasket SZ-210 (IP23 without SZ-210).

## Dome shape LED Signal Light featuring enhanced visibility and maintenance-free operation.

FEATURES

- Has maintenance-free LED's that consume nearly half the power incandescent bulb models (AC100V/200V) do.
- Newly-developed triple-reflection system for enhanced visibility and low power consumption.
- PEW-B type has a built-in adjustable audible alarm with a volume of up to 85dB (at 1m).
- Indoor installation can be upright, inverted or sideways; Outdoors is for upright only.
- The PES is rated for IP55 with the optional rubber gasket SZ-210 (IP23 without SZ-210).
- Has the CE mark and conforms to the requirements for the EC directive. (for 24V type)
- Is a UL Recognized Component (File No. E215660, for 24V, 120V, 230V types only).
- Dome is made of superior weather resistant and light translucent acrylic resin.
- Three flashing patterns of 60/120/180 fpm, switch selectable.
- The PEW is rated for IP54 (IP23 with side-wire exit mounting)
- Available colors are in Red, Amber, Green, and Blue.

AVAILABLE BY SPECIAL ORDER

- Body Color: Silver
- IP65: PEW type only

## How to Order

**PEW-□A□-□**

Model

Rated Voltage
24: AC/DC24V
100: AC 100V
120: AC 120V
200: AC 200V
230: AC 230V

Type
Blank : Continuous/ Flash
B : Continuous/Flashing/ Alarm

Color
R: Red
Y: Amber
G: Green
B: Blue

**PES-□A-□**

Model

Rated Voltage
24 : AC/DC 24V
100: AC 100V
120: AC 120V
200: AC 200V
230: AC 230V

Color
R: Red
Y: Amber
G: Green
B: Blue



Courtesy of Steven Engineering, Inc. - (800) 258-9200 - sales@steveneng.com - www.stevenengineering.com

## Dimensions

PEW-A

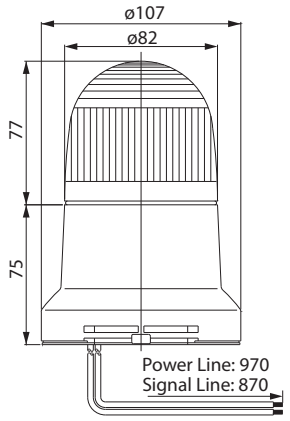


PES-A

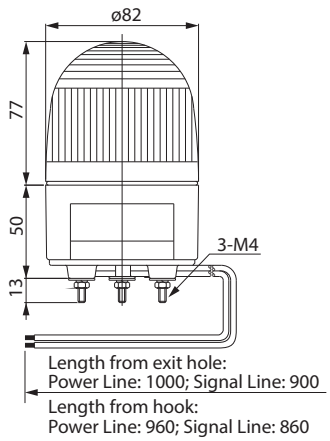


Mounting Dimensions

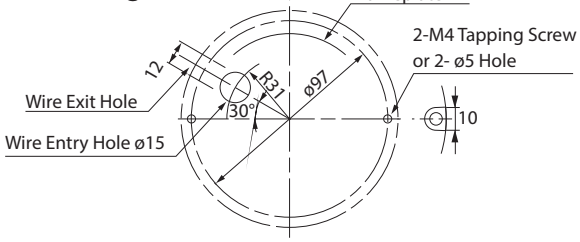


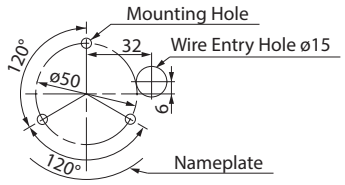


## Wiring

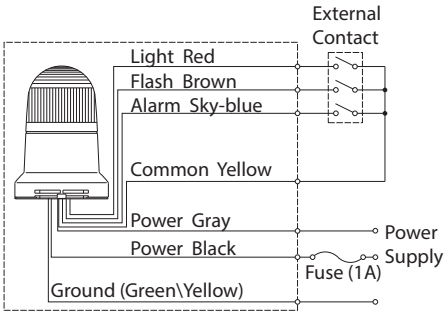


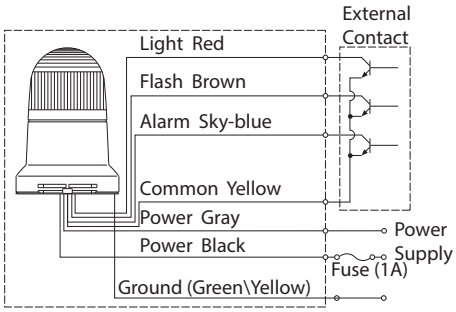


* All Models have the same wiring
* Sky-blue signal wire is for buzzer type only
* Ground wire is added for high-voltage types only

## Specifications

| Model | Color | Rated Voltage | Power Consumption | Inrush Current | Mass |
|---|---|---|---|---|---|
| PEW-24A | R/Y | AC/DC 24V | 1.2W | 2.5A | 320g |
| | G/B | | 1.5W | | |
| PEW-24AB | R/Y | | 2.2W | | 340g |
| | G/B | | 2.5W | | |
| PEW-100A | R/Y | AC 100V | 2.8W | 1.0A | 520g |
| | G/B | | 3.3W | | |
| PEW-100AB | R/Y | | 5.3W | | 540g |
| | G/B | | 5.8W | | |
| PEW-120A | R/Y | AC 120V | 3.0W | | 520g |
| | G/B | | 3.5W | | |
| PEW-120AB | R/Y | | 5.7W | | 540g |
| | G/B | | 6.2W | | |
| PEW-200A | R/Y | AC 200V | 2.5W | 0.5A | 520g |
| | G/B | | 3.2W | | |
| PEW-200AB | R/Y | | 4.9W | | 540g |
| | G/B | | 5.6W | | |
| PEW-230A | R/Y | AC 230V | 3.1W | | 520g |
| | G/B | | 3.8W | | |
| PEW-230AB | R/Y | | 5.9W | | 540g |
| | G/B | | 6.4W | | |

| Model | Color | Rated Voltage | Power Consumption | Inrush Current | Mass |
|---|---|---|---|---|---|
| PES-24A | R/Y | AC/DC 24V | 1.2W | 2.5A | 240g |
| | G/B | | 1.5W | | |
| PES-100A | R/Y | AC 100V | 4.2W | 1.0A | 430g |
| | G/B | | 4.7W | | |
| PES-120A | R/Y | AC 120V | 4.4W | | |
| | G/B | | 4.9W | | |
| PES-200A | R/Y | AC 200V | 4.0W | 0.5A | |
| | G/B | | 4.7W | | |
| PES-230A | R/Y | AC 230V | 4.6W | | |
| | G/B | | 5.3W | | |



Courtesy of Steven Engineering, Inc. - (800) 258-9200 - sales@steveneng.com - www.stevenengineering.com

# KPE-A

## Flashing/Rotating Light

LED

IP23

Φ162

## Revolving Warning Light featuring maintenance-free LED's, Corrosion-proof plastic and adjustable flashing cycles.

FEATURES

- Enhanced design with special high-intensity illumination to improve light diffusion and ensure sufficient brightness, even outdoors.
- Internally adjustable flashing cycle between 50 and 200 times per minute.
- Extended long-life with LEDs so no bulb replacement is needed, perfect for "hard-to-service" locations.
- Indoor installation can be upright, inverted or sideways; Outdoors is for upright only.
- With an electronic rotating light system, no worn-out motors to replace.
- Main body is made of special weather-resistant resin.
- Dome is made from superior weather-resistant and light translucent acrylic resin.
- Stainless mounting bolts with corrosion-proof screws.
- Available Colors are Red and Amber.

## Specifications

| Model | Rated Voltage | Power Consumption | Flash Rate | Mass |
|---|---|---|---|---|
| KPE-100A | AC 100V | Continuous: 4W<br>Flashing: 9W | 50 - 200 rpm<br>60 fpm | 1.5kg |
| KPE-220A | AC 220V | | | |

## How to Order

**KPE-□A-□**

Model

Rated Voltage
100: AC 100V
220: AC 220V

Color
R: Red
Y: Amber

## Dimensions

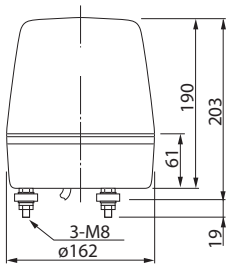


Mounting Dimensions

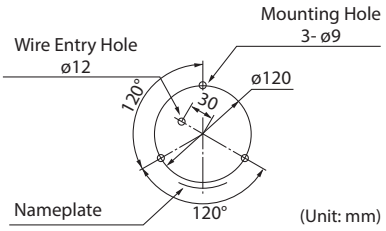


(Unit: mm)

## Wiring

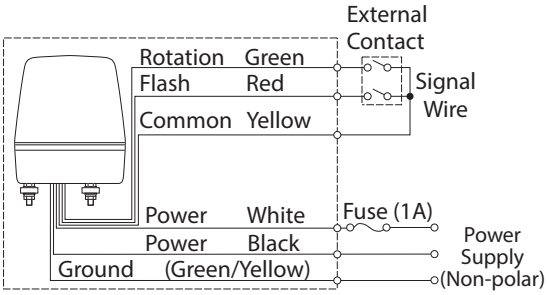




Courtesy of Steven Engineering, Inc. - (800) 258-9200 - sales@steveneng.com - www.stevenengineering.com

MEMO

For more details, visit our website at http://www.patlite.com



Courtesy of Steven Engineering, Inc. - (800) 258-9200 - sales@steveneng.com - www.stevenengineering.com

MEMO

For more details, visit our website at http://www.patlite.com



Courtesy of Steven Engineering, Inc. - (800) 258-9200 - sales@steveneng.com - www.stevenengineering.com

# Revolving Warning Light

Courtesy of Steven Engineering, Inc. - (800) 258-9200 - sales@steveneng.com - www.stevenengineering.com

# SKHE / SKHEB

## Super-bright LED Revolving Warning Light

RoHS CE

LED

90dB at 1m (SKHEB)

IP23

Φ118

## Compact LED revolving warning light featuring one super-bright LED chip and an enhanced high dispersion reflection system.

FEATURES

- SKHEB series includes an internal alarm (hi-pitched tone) of 90dB (at 1m) that is synchronized with the light operation.
- Indoors allows upright, inverted, and horizontal installation; outdoors allows upright installation only.
- Has the CE mark and conforms to the requirements (for 12V, 24V type only) for the EC directive.
- Compact motor with high durability and energy-efficient characteristics.
- Energy-efficient by using only 1 LED chip which is super-bright.
- Dome lens is made of impact and heat resistant polycarbonate resin.
- Colors available are Red, Amber, Green, and Blue.

## How to Order

**SKHE□-□A-□**

Model

Alarm
None: Without
B: With

Rated Voltage
12 : DC 12V
24 : DC 24V
100: AC 100V
200: AC 200V

Color
R: Red
Y: Amber
G: Green
B: Blue

## Dimensions

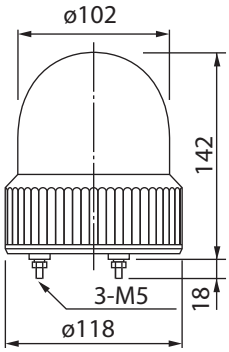


Mounting Dimensions

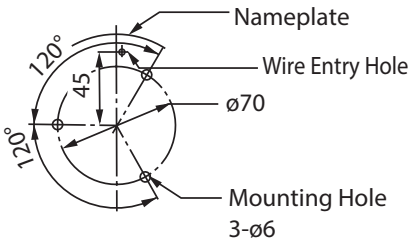


(Unit: mm)

## Specifications

| Model | Rated Voltage | Current Consumption | Flash Rate (fpm) | Mass |
|---|---|---|---|---|
| SKHE/SKHEB-12 | DC 12V | 0.25A | 120 | 400g |
| SKHE/SKHEB-24 | DC 24V | 0.16A | | |
| SKHE/SKHEB-100 | AC 100V | 0.04A | | 600g |
| SKHE/SKHEB-200 | AC 200V | 0.02A | | |

*Newly developed reflector for LED revolving warning light*

The PATLITE LED revolving warning light uses a unique and patented reflecting system, solely designed for these models. Even though the dispersion characteristics of the LED chip is less than an incandescent bulb, PATLITE's unique design creates an equivalent dispersion effect with the light reflector.

The uniquely designed reflectors not only reflect upward and to the side, but also downward; this cannot be achieved by incandescent bulb type revolving warning lights. The PATLITE LED revolving warning light is suitable for applications where high visibility from a low angle is required.



Courtesy of Steven Engineering, Inc. - (800) 258-9200 - sales@steveneng.com - www.stevenengineering.com

# RLE

## Revolving Warning Light

Optional Rubber Gasket SZ-210

LED

IP65 (with SZ-200A)

Φ82

# LED Signal Light featuring energy-saving and enhanced illumination with an LED integrated reflection system.

FEATURES

- Indoors allows upright, inverted, and horizontal installation; outdoors allows upright installation only.
- Dome lens is made of superior impact and heat resistant polycarbonate resin.
- Compact motor with high durability and energy-efficient characteristics.
- LED integrated reflection system for enhanced illumination.
- Energy-efficient and maintenance-free LED array
- Main body is made of impact and heat resistant ABS resin.
- Colors available are Red, Amber, and Green.

## Specifications

| Model | Rated Voltage | Power Consumption | Flash Rate (fpm) | Mass |
|---|---|---|---|---|
| ◎ RLE-12 | DC 12V | 1.7W | 120 | 400g |
| RLE-24 | DC 24V | 3.9W | | |
| RLE-100 | AC 100V | 2W | | 600g |
| RLE-220 | AC 220V | | | |

◎ Available by Special Order

## How to Order

**RLE-□-□**

Model

Rated Voltage
- 12 : DC 12V
- 24 : DC 24V
- 100: AC 100V
- 200: AC 200V

Color
- R: Red
- Y: Amber
- G: Green
- B: Blue

## Dimensions

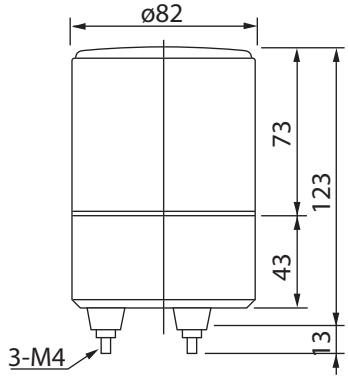


Mounting Dimensions

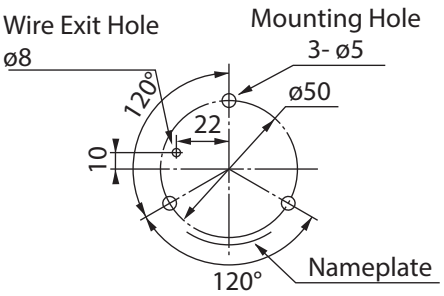


(Unit: mm)

# RKE/RKEB/RHE/RHEB

## Super-bright LED Revolving Warning Light

RoHS

LED

IP55 (with SZ-200A)

Φ100

## Compact LED revolving warning light featuring one super-bright LED chip and an enhanced high dispersion reflection system.

FEATURES

- RHEB/RKEB includes an internal alarm (hi-pitched tone) of 90dB (at 1m) that is synchronized with the light operation.
- Has the CE mark and conforms to the requirements (for 12V, 24V type only) for the EC directive.
- Compact motor with high durability and energy-efficient characteristics.
- Dome lens is made of impact and heat resistant polycarbonate resin.
- Energy-efficient by using only 1 LED chip which is super-bright.
- Main body is made of impact and heat resistant ABS resin.
- Colors available are Red, Amber, Green, and Blue.
- Uses a terminal block for easy wiring.

## How to Order

**RKE** □-□-□

Model
RKE
RHE

Alarm
None: Without
B: With

Rated Voltage
12 : DC 12V
24 : DC 24V
100: AC 100V
200: AC 200V

Color
R: Red
Y: Amber
G: Green
B: Blue

## Specifications

| Model | Rated Voltage | Current Consumption | Flash Rate | Mass |
|---|---|---|---|---|
| RKE/RKEB-12 | DC 12V | 0.25A | 120 fpm | 400g |
| RKE/RKEB-24 | DC 24V | 0.16A | | |
| RKE/RKEB-100 | AC 100V | 0.04A | | 600g |
| RKE/RKEB-200 | AC 200V | 0.02A | | |
| RHE/RHEB-12 | DC 12V | 0.25A | | 400g |
| RHE/RHEB-24 | DC 24V | 0.16A | | |
| RHE/RHEB-100 | AC 100V | 0.04A | | 600g |
| RHE/RHEB-200 | AC 200V | 0.02A | | |

## Dimensions

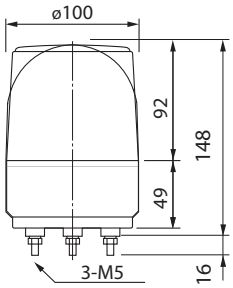


Mounting Dimensions

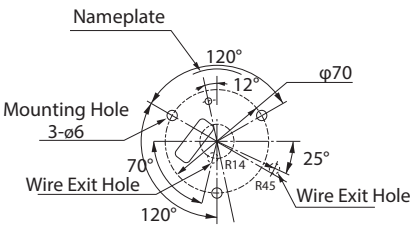


(Unit: mm)

*Newly developed reflector for LED revolving warning light*

The PATLITE LED revolving warning light uses a unique and patented reflecting system, solely designed for these models. Even though the dispersion characteristics of the LED chip is less than an incandescent bulb, PATLITE's unique design creates an equivalent dispersion effect with the light reflector.

The uniquely designed reflectors not only reflect upward and to the side, but also downward; this cannot be achieved by incandescent bulb type revolving warning lights. The PATLITE LED revolving warning light is suitable for applications where high visibility from a low angle is required.



Courtesy of Steven Engineering, Inc. - (800) 258-9200 - sales@steveneng.com - www.stevenengineering.com

# RKEM/ RHEM

## Super-bright LED Revolving Warning Light

CE RoHS

LED

IP55 (with SZ-200A)

Φ100

Brushless Motor

## Compact LED revolving warning light featuring one super-bright LED chip with an enhanced dispersion reflection system and brushless motor.

FEATURES

- Has the CE mark and conforms to the requirements (for 12V, 24V type only) for the EC directive.
- Brushless compact motor with high durability and long-lasting characteristics.
- Dome lens is made of impact and heat resistant polycarbonate resin.
- Energy-efficient by using only 1 LED chip which is super-bright.
- Main body is made of impact and heat resistant ABS resin.
- Colors available are Red, Amber, Green, and Blue.
- Uses a terminal block for easy wiring.

## How to Order

**RKEM - □ - □**

Model
RKEM
RHEM

Rated Voltage
12 : DC 12V
24 : DC 24V
M2 : AC 100 - 200V

Color
R: Red
Y: Amber
G: Green
B: Blue

## Dimensions

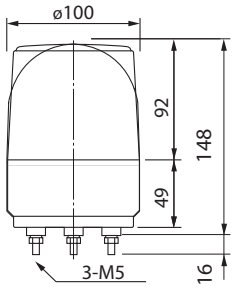


Mounting Dimensions

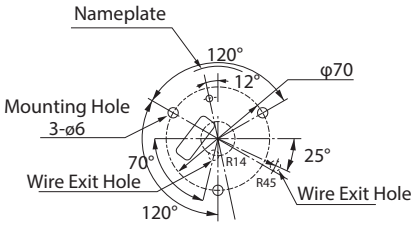


(Unit: mm)

## Specifications

| Model | Rated Voltage | Current Consumption | Flash Rate | Mass |
|---|---|---|---|---|
| RKEM-12 | DC 12V | 0.20A | 120 fpm | 400g |
| RKEM-24 | DC 24V | 0.14A | | |
| RKEM-M2 | AC 100-200V | 0.20A-0.06A | | |
| RHEM-12 | DC 12V | 0.20A | | |
| RHEM-24 | DC 24V | 0.14A | | |
| RHEM-M2 | AC 100-200V | 0.20A-0.06A | | |

## Conventional Motor Construction

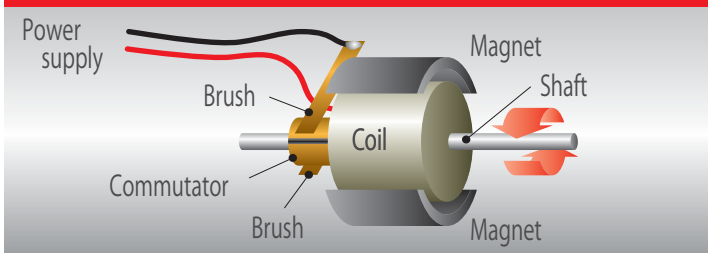


## Brushless Motor Construction

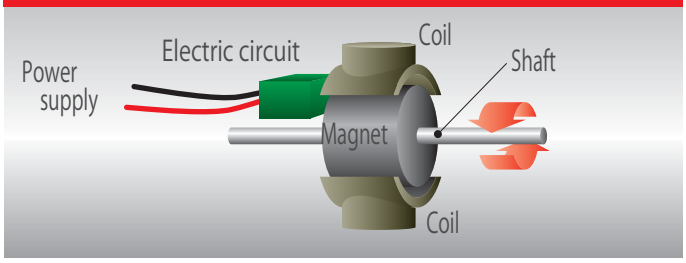




Courtesy of Steven Engineering, Inc. - (800) 258-9200 - sales@steveneng.com - www.stevenengineering.com

# RU / RUP / RS

## Revolving Warning Light

CE

**Bulb**

**IP55** (with SZ-210)

**Φ82**

# Compact Revolving Warning Light perfectly designed for small devices.

FEATURES

- Indoors allows upright, inverted, and sideways installation; outdoors allows upright installation only.
- Has the CE mark and conforms to the requirements (for 12V, 24V type only) for the EC directive.
- Dome is made from superior impact and heat resistant polycarbonate resin.
- Main body is made of impact and heat-resistant polycarbonate resin.
- Rotating parabolic reflector to enhance visibility from a distance.
- Vibration-resistant automobile bulb for extended bulb life.
- Available Colors are Red, Amber, Green, and Blue.

AVAILABLE BY SPECIAL ORDER

- Body Color: Silver
- Mounting Pole and Bracket: Standard with RUP Series.

## How to Order

**RU** - □ - □

Model
RU
RS
RUP

Rated Voltage
12 : DC 12V
24 : DC 24V
100: AC 100V
120: AC 120V
220: AC 220V
240: AC 240V
24AC: AC 24V (Special Order)

Color
R: Red
Y: Amber
G: Green
B: Blue

## Dimensions

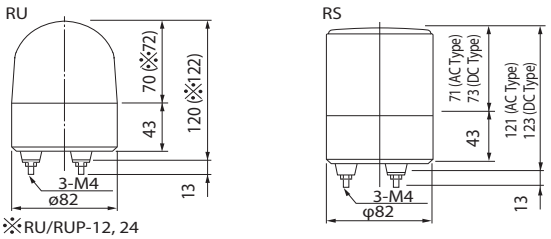


※RU/RUP-12, 24

Mounting Dimensions

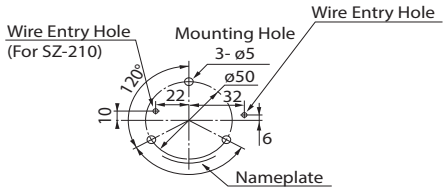


(Unit: mm)

## Specifications

| Model | Rated Voltage | Current Consumption | Flash Rate (fpm) | Bulb | | Mass | |
|---|---|---|---|---|---|---|---|
| | | | | Ratings | Repl. No. | RU/RS | RUP |
| RU/RS-12 | DC 12V | 0.5A | 120 | 12V 6W | 18 | 0.4kg | 0.8kg |
| RU/RS-24 | DC 24V | 0.3A | | 24V 6W | 19 | | |
| RU/RS-100 | AC 100V | 0.1A | | 12V 6W | 18 | 0.6kg | 1.0kg |
| RU/RS-120 | AC 120V | | | | | | |
| RU/RS-220 | AC 220V | 0.05A | | | | | |
| RU/RS-240 | AC 240V | | | | | | |
| ◎ RU/RS-24AC | AC 24V | 0.3A | | 24V 6W | 19 | 0.4kg | 0.8kg |

◎ Available by Special Order



Courtesy of Steven Engineering, Inc. - (800) 258-9200 - sales@steveneng.com - www.stevenengineering.com

Model DEB LED Lamp
Recommended Product
For more details on Model DEB
Refer to the "Replacement Bulb"
Section at the end of this Catalog

ALARM

# RH-A / RK-A

## Revolving Warning Light

Optional Rubber Gasket SZ-200A

- Bulb
- IP55 (with SZ-200A)
- 1 Alarm Sound (RHB & RKB)
- 90dB at 1m (RHB & RKB)
- Terminal
- Φ100

# Compact Revolving Warning Light featuring high durability and easy wiring with terminal block.

FEATURES

- Indoors allows upright, inverted, and sideways installation; Outdoors allows upright installation only.
- Has the CE mark and conforms to the requirements (for 12V, 24V type only) for the EC directive.
- Dome is made from superior impact and heat resistant polycarbonate resin.
- Main body is made of impact and heat-resistant polycarbonate resin.
- Built-in audible alarm for models RHB/RKB at a sound of 90dB (at 1m).
- Rotating parabolic reflector to enhance visibility from a distance.
- Is UL Listed for 24V, 120V, and 240V types (File No. E215660)
- Vibration-resistant automobile bulb for extended bulb life.
- Available Colors are Red, Amber, Green, and Blue.
- Utilizes a terminal block for easy wiring.

AVAILABLE BY SPECIAL ORDER (RH TYPE)

- Body Color: Silver

## How to Order

**RK - □ A □ □**

Model
RK-A
RH-A

Rated Voltage
12 : DC 12V
24 : DC 24V
100: AC 100V
200: AC 200V

Conformity
None : Standard
(UL) : UL Conformity

Color
R: Red
Y: Amber
G: Green
B: Blue

## Dimensions

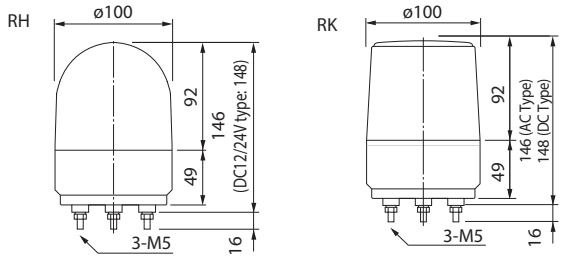


Mounting Dimensions

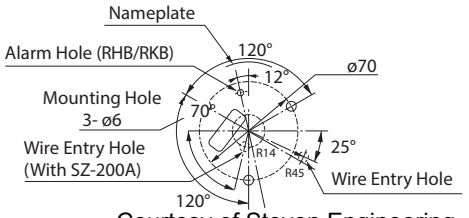


(Unit: mm)

## Specifications

| Model | Rated Voltage | Current Consumption | Flash Rate (fpm) | Bulb | | Mass |
|---|---|---|---|---|---|---|
| | | | | Ratings | Repl. No. | |
| RH/RHB-12A | DC 12V | 0.8A | 170 | 12V 10W | 9 | 400g |
| RH/RHB-24A (UL) | DC 24V | 0.5A | | 24V 10W | 10 | |
| RH/RHB-120A (UL) | AC 120V | 0.1A | | 12V 5W | 12 | 600g |
| RH/RHB-200A | AC 200V | 0.03A | | | | |
| RH/RHB-240A (UL) | AC 240V | 0.05A | | | | |
| RK/RKB-24A (UL) | DC 24V | 0.5A | | 24V 10W | 10 | 400g |
| RK/RKB-120A (UL) | AC 120V | 0.1A | | 12V 5W | 12 | 600g |
| RK/RKB-200A | AC 200V | 0.03A | | | | |
| RK/RKB-240A (UL) | AC 240V | 0.05A | | | | |



Courtesy of Steven Engineering, Inc. - (800) 258-9200 - sales@steveneng.com - www.stevenengineering.com

# SKH-A

## Revolving Warning Light

Model DEB LED Lamp
Recommended Product
For more details on Model DEB Refer to the "Replacement Bulb" Section at the end of this Catalog

ALARM

**Bulb**

**1 Alarm Sound** (SKHB)

**90dB at 1m** (SKHB)

**IP56** (SKH-SA, others IP23)

**Φ118**

# Corrosion-proof plastic Revolving Warning Light for a variety of applications.

FEATURES

- Rotating parabolic reflector to enhance visibility from a distance.
- Vibration-resistant automobile bulb for extended bulb life.
- Includes an internal alarm of 90dB (at 1m) that is synchronized with the light operation.
- Upright, inverted, and sideways installation allowed for indoors* as well as outdoors.
- Dome is made from superior weather-resistant and light-translucent acrylic resin.
- Available Colors are Red, Amber, Green, and Blue.
- Has the CE mark and conforms to the requirements (for 12V, 24V type only) for the EC directive.

*SKH-SA installation allows upright and inverted installation only for indoor use.

## Specifications

| Model | Rated Voltage | Current Consumption | Flash Rate (fpm) | Bulb | | Mass |
|---|---|---|---|---|---|---|
| | | | | Ratings | Repl. No. | |
| SKH-101A/SKHB-12A | DC 12V | 0.8A | 170 | 12V 10W | 9 | 400g |
| SKH-102A/SKHB-24A | DC 24V | 0.5A | | 24V 10W | 10 | |
| SKH-110A/SKHB-100A | AC 100V | 0.065A | | 12V 5W | 12 | 600g |
| SKH-112A/SKHB-120A | AC 120V | 0.07A | | | | |
| SKH-120A/SKHB-200A | AC 200V | 0.03A | | | | |
| SKH-102SA | DC24V | 0.5A | | 24V 10W | 10 | 400kg |
| SKH-110SA | AC 100V | 0.1A | | 12V 5W | 12 | 600g |

## How to Order

**SKH □-□A-□**

Model

Alarm
None: Without
B: With

Rated Voltage
12 : DC 12V
24 : DC 24V
100: AC 100V
200: AC 200V

Color
R: Red
Y: Amber
G: Green
B: Blue
P: Purple

## Dimensions

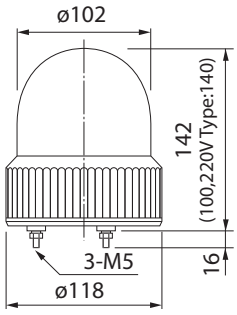


Mounting Dimensions (DC Type)

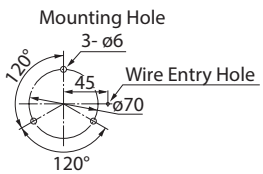


Mounting Dimensions (AC Type)

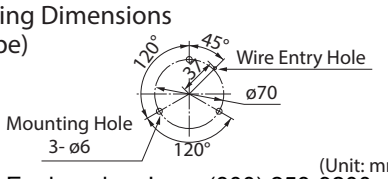


(Unit: mm)



Courtesy of Steven Engineering, Inc. - (800) 258-9200 - sales@steveneng.com - www.stevenengineering.com

Model DEB LED Lamp
Recommended Product
For more details on Model DEB
Refer to the "Replacement Bulb"
Section at the end of this Catalog

# SKH-EA

## Revolving Warning Light

Bulb

IP23

Φ100

## Best-selling Revolving Warning Light for wide range of applications.

FEATURES

- Indoors allows upright, inverted, and sideways installation; outdoors allows upright installation only.
- Has the CE mark and conforms to the requirements (for 12V, 24V type only) for the EC directive.
- Dome is made from superior weather-resistant and light-translucent acrylic resin.
- Rotating parabolic reflector to enhance visibility from a distance.
- Vibration-resistant automobile bulb for extended bulb life.
- Available Colors are Red, Amber, Green, and Blue.

## Specifications

| Series | Model | Rated Voltage | Current Consumption | Flash Rate (fpm) | Bulb | | Mass |
|---|---|---|---|---|---|---|---|
| | | | | | Ratings | Repl. No. | |
| USA Version | SKH-12EA | DC 12V | 0.8A | 170 | 12V 10W | 9 | 400g |
| | SKH-24EA | DC 24V | 0.5A | | 24V 10W | 10 | |
| | SKH-120EA | AC 120V | 0.07A | | 12V 5W | 12 | 600g |
| Standard Version | SKH-12EA | DC 12V | 0.8A | | 12V 10W | 9 | 400g |
| | SKH-24EA | DC 24V | 0.5A | | 24V 10W | 10 | |
| | SKH-100EA | AC 120V | 0.065A | | 12V 5W | 12 | 600g |
| | SKH-200EA | AC 200V | 0.03A | | | | |

## How to Order

**SKH-□EA-□**

Model

Rated Voltage
12 : DC 12V
24 : DC 24V
100: AC 100V
120: AC 120V
200: AC 200V

Color
R: Red
Y: Amber
G: Green
B: Blue

## Dimensions

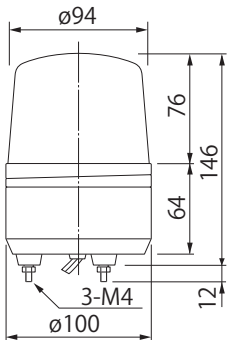


Mounting Dimensions

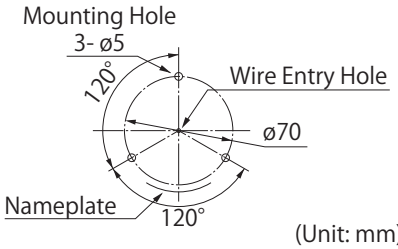


(Unit: mm)



Courtesy of Steven Engineering, Inc. - (800) 258-9200 - sales@steveneng.com - www.stevenengineering.com

# SKP-A

## Revolving Warning Light

Bulb

IP23

Φ138

## A Revolving Warning Light featuring corrosion-resistance and a stable and silent rotation.

FEATURES

- Main body is made of a melamine baked finish with a corrosion-proof stainless steel (SUS 304) lens mounting fixture.
- Has the CE mark and conforms to the requirements (for 12V, 24V, 48V DC types only) for the EC directive.
- Indoors allows upright, inverted, and sideways installation; outdoors allows upright installation only.
- Dome lens is made of superior impact and heat resistant polycarbonate resin.
- Rotary Mechanism is gear-driven for stable rotation under vibration.
- Available Colors are in Red, Amber, Green, and Blue.

## Specifications

| Model | Rated Voltage | Current Consumption | Flash Rate (fpm) | Bulb | | Mass |
|---|---|---|---|---|---|---|
| | | | | Ratings | Repl. No. | |
| SKP-101A | DC 12V | 2.6A | 140 | 12V 35W | 1 | 0.8kg |
| SKP-102A | DC 24V | 1.2A | | 24V 35W | 2 | |
| SKP-104A | DC 48V | 0.8A | | 48V 35W | 5 | 0.9kg |
| ◎ SKP-110ADC | DC 100V | 0.35A | | 120V 40W | 36 | |
| SKP-110A | AC 100V | 0.3A | | | | 1.0kg |
| SKP-120A | AC 200V | 0.13A | 120 | 220V 30W | 37 | |

◎ Available by Special Order

## Dimensions

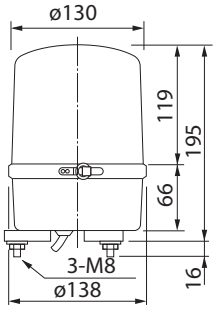


Mounting Dimensions

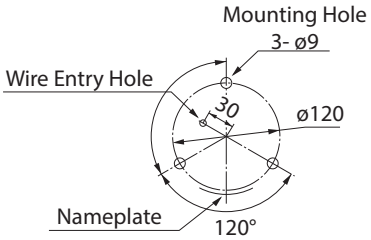


(Unit: mm)

## How to Order

**SKP- □A- □**

Model

Rated Voltage
12 : DC 12V
24 : DC 24V
48 : DC 48V
100 : AC 100V
200: AC 200V
100DC: DC 100V (Special Order)

Color
R: Red
Y: Amber
G: Green
B: Blue



Courtesy of Steven Engineering, Inc. - (800) 258-9200 - sales@steveneng.com - www.stevenengineering.com

# SKL-A

## Revolving Warning Light

Bulb

IP23

Φ162

## Basic Large-sized Revolving Warning Light with highly durable housing.

FEATURES

- Main body for the SKL-CA has a scratch-free melamine baked finish, and the SKL-SA is of corrosion-proof stainless steel.
- Has the CE mark and conforms to the requirements (for 12V, 24V, 48V DC type only) for the EC directive.
- Indoors allows upright, inverted, and sideways installation; outdoors allows upright installation only.
- Dome is made of a superior impact and heat-resistant polycarbonate resin.
- Available Colors are Red, Amber, Green, and Blue.

## Specifications

| Model | Rated Voltage | Current Consumption | Flash Rate (fpm) | Bulb | | Mass |
|---|---|---|---|---|---|---|
| | | | | Ratings | Repl. No. | |
| SKL-101CA/101SA | 12V DC | 2.6A | 140 | 12V 35W | 1 | 1.3kg |
| SKL-102CA/102SA | 24V DC | 1.2A | | 24V 35W | 2 | |
| ◎ SKL-102ACSA | 24V AC | | | | | |
| SKL-104CA | 48V DC | 0.8A | | 48V 35W | 5 | 1.4kg |
| SKL-110CA/110SA | 100V AC | 0.3A | | 120V 40W | 36 | 1.5kg |
| SKL-112SA | 120V AC | 0.4A | | | | |
| SKL-120CA/120SA | 200V AC | 0.13A | 120 | 220V 30W | 37 | |

◎ Available by Special Order

## How to Order

**SKL-** □□ **A-** □

Model

Rated Voltage
101 : DC 12V
102 : DC 24V
104 : DC 48V
110 : AC 100V
112 : AC 120V
120 : AC 200V
102AC: AC 24V (Special Order)

Body
CA: Melamine Finish
SA: Stainless Steel

Color
R: Red
Y: Amber
G: Green
B: Blue

## Dimensions

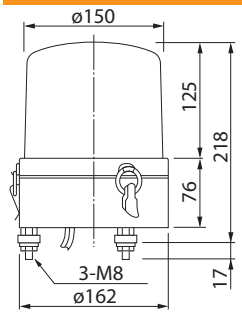


Mounting Dimensions

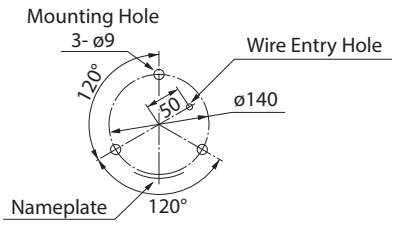


(Unit: mm)



Courtesy of Steven Engineering, Inc. - (800) 258-9200 - sales@steveneng.com - www.stevenengineering.com

# SKC-A

## Revolving Warning Light

Bulb

IP23

Φ187

Dual-face Reflector

## Large Revolving Warning Light featuring a powerful dual-face reflector flash.

FEATURES

- Extended product lifespan by using vibration-resistance and reliable operation, even under a severely cold environment (-30°C).
- Main body is made of a melamine baked finish with a corrosion-proof stainless steel (SUS 304) lens mounting fixture.
- Indoors allows upright, inverted, and sideways installation; outdoors allows upright installation only.
- Has the CE mark and conforms to the requirements (for 12V, 24V type only) for the EC directive.
- Dome lens is made of superior weather-resistant and light-translucent acrylic resin.
- The rotary mechanism is belt-driven for an extremely quiet and stable rotation.
- Compact motor with high durability and energy-efficient characteristics.
- Available Colors are in Red, Amber, Green, and Blue.
- Dual-face reflector for a powerful rotary flash.

## Specifications

| Model | Rated Voltage | Current Consumption | Flash Rate (fpm) | Bulb | | Mass |
|---|---|---|---|---|---|---|
| | | | | Ratings | Repl. No. | |
| SKC-201A | 12V DC | 2.6A | 200 | 12V 35W | 1 | 1.6kg |
| SKC-202A | 24V DC | 1.2A | | 24V 35W | 2 | |
| SKC-210A | 100V AC | 0.3A | | 120V 40W | 36 | 1.8kg |
| SKC-212A | 120V AC | 0.4A | | | | |
| SKC-220A | 200V AC | 0.13A | 160 | 220V 30W | 37 | |

## How to Order

**SKC-□A-□**

Model

Rated Voltage
201: DC 12V
202: DC 24V
210: AC 100V
212: AC 120V
220: AC 200V

Color
R: Red
Y: Amber
G: Green
B: Blue

## Dimensions

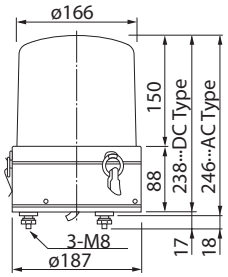


Mounting Dimensions

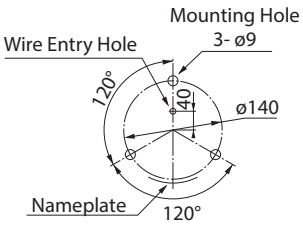


(Unit: mm)



Courtesy of Steven Engineering, Inc. - (800) 258-9200 - sales@steveneng.com - www.stevenengineering.com

# SKV-A

## Revolving Warning Light

Bulb

IP66

Φ204

## Corrosion-resistant Revolving Warning Light.

FEATURES

- Main body is made of corrosion-resistant aluminum alloy die-cast with a metal cable gland.
- Dome lens is made of superior impact and heat resistant polycarbonate resin.
- Operating Temperature Range is from -30°C to +80°C.
- Allows upright, inverted, and sideways installation.
- Available Colors are in Red and Amber.

## Specifications

| Model | Rated Voltage | Current Consumption | Flash Rate (fpm) | Bulb | | Mass |
|---|---|---|---|---|---|---|
| | | | | Ratings | Repl. No. | |
| SKV-101A | 12V DC | 2.6A | 140 | 12V 35W | 1 | 2.6kg |
| SKV-102A | 24V DC | 1.2A | | 24V 35W | 2 | |
| SKV-110A | 100V AC | 0.3A | | 120V 40W | 36 | 2.8kg |
| SKV-120A | 200V AC | 0.13A | 120 | 220V 30W | 37 | |

## How to Order

**SKV-□A-□**

Model

Rated Voltage
201: DC 12V
202: DC 24V
210: AC 100V
220: AC 200V

Color
R: Red
Y: Amber

## Dimensions

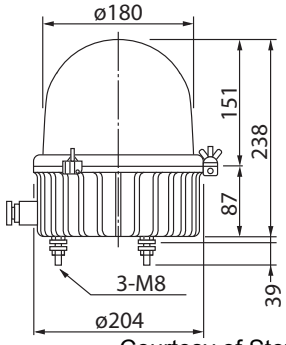


Mounting Dimensions

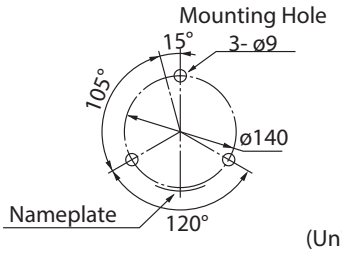


(Unit: mm)

# SKHB-1006D

## Revolving Warning Light

**Bulb**

**1 Alarm Sound**

**IP23**

**Φ162**

**Portable**

## Portable Revolving Warning Light with dry cell batteries.

FEATURES

- Built-in operation-selectable alarm with external switch for light rotation only, or with buzzer and light rotation (solenoid buzzer sound).
- Contains five (5) SUM-1 batteries for 4 hours of operation, or five (5) LR20 for about 15 hours.
- Dome is made of superior weather-resistant and light-translucent acrylic resin.
- The 1006MA type includes a powerful magnet for secure placement.
- Installation is for the upright position only.
- Available Colors are Red and Amber.

## Specifications

| Model | Rated Voltage | Power Consumption | Flash Rate (fpm) | Bulb | | Mass |
|---|---|---|---|---|---|---|
| | | | | Ratings | Repl. No. | |
| SKHB-1006D | DC6V (SUM-1x5) | 3W | 170 | 6V 3W | 8 | 2.0kg |
| SKHB-1006MD | | | | | | 2.1kg |

## How to Order

**SKHB-1006□D-□**

Model

Magnet Base
None: Without
M: With

Color
R: Red
Y: Amber

## Dimensions

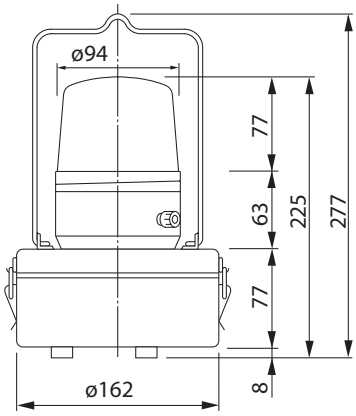


Mounting Dimensions

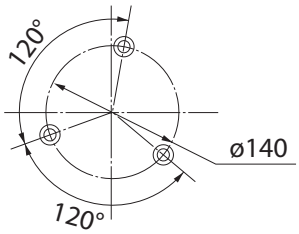


(Unit: mm)



Courtesy of Steven Engineering, Inc. - (800) 258-9200 - sales@steveneng.com - www.stevenengineering.com

# KP-A

## Revolving Warning Light

CE

Bulb

IP23

Φ162

## Corrosion-proof plastic Revolving Warning Light for a wide range of applications.

FEATURES

- Extended product lifespan by using vibration-resistance and reliable operation, even under a severely cold environment (-30°C).
- Indoors allows upright, inverted, and sideways installation; outdoors allows upright installation only.
- Has the CE mark and conforms to the requirements (for 24V type only) for the EC directive.
- Dome lens is made of superior weather-resistant and light-translucent acrylic resin.
- Mounting Bolts are drip-proof and made of rust-free stainless steel.
- Rotating parabolic reflector to enhance visibility from a distance.
- Main Body is made of special UV and water-resistant resin.
- Available Colors are Red, Amber, Green, and Blue.

## Specifications

| Model | Rated Voltage | Current Consumption | Flash Rate (fpm) | Bulb | | Mass |
|---|---|---|---|---|---|---|
| | | | | Ratings | Repl. No. | |
| KP-24A | 24V DC | 1.2A | 140 | 24V 35W | 2 | 1.0kg |
| KP-100A | 100V AC | 0.3A | | 120V 40W | 6 | 1.2kg |
| KP-120A | 120V AC | 0.4A | | | | |
| KP-200A | 200V AC | 0.13A | 120 | 220V 30W | 37 | |

## How to Order

**KP-□A-□**

Model

Rated Voltage
24 : DC 24V
100: AC 100V
120: AC 120V
200: AC 200V

Color
R: Red
Y: Amber
G: Green
B: Blue

## Dimensions

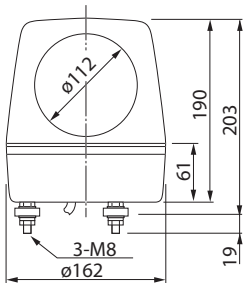


Mounting Dimensions

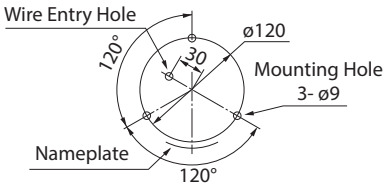


(Unit: mm)

# WH-A / WK-A

## Revolving Warning Light

CE

ALARM

Model DEB LED Lamp
Recommended Product
For more details on Model DEB
Refer to the "Replacement Bulb"
Section at the end of this Catalog

WH-A

WK-A

**Bulb**

**1 Alarm Sound** (WHB-A Only)

**90dB at 1m** (WHB-A Only)

**IP54**

**Φ100**

**Easily attachable to an electrical box with easy wiring to a terminal block.**

**Install in various directions when using for indoor applications.**

- Sideways
- Upside-down

When installing the WHB, direct the buzzer in a downward direction.

## Wall-mount Revolving Warning Light featuring easy wiring with terminal block.

FEATURES

- Has the CE mark and conforms to the requirements (12V, 24V type only) for the EC directive.
- Upright, inverted, and sideways installation allowed for indoors as well as outdoors*.
- Dome is made from superior weather-resistant and light-translucent acrylic resin.
- Rotating parabolic reflector to enhance visibility from a distance.
- Compact motor with high durability and energy-efficient characteristics.
- Vibration-resistant automobile bulb for extended bulb life.
- Main body is made of impact and heat resistant ABS resin.
- Available Colors are Red, Amber, Green, and Blue.
- Uses a terminal block for easy wiring.

*WHB installation is upright only for outdoor use.

## Dimensions

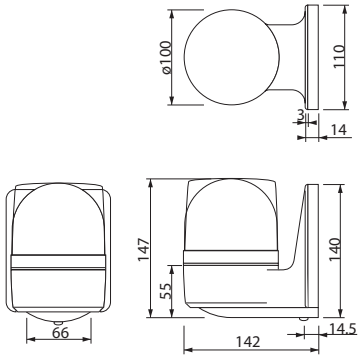


Mounting Dimensions

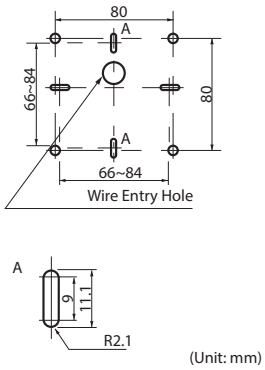


(Unit: mm)

## Specifications

| Model | Rated Voltage | Current Consumption | Flash Rate (fpm) | Bulb Ratings | Bulb Repl. No. | Mass |
|---|---|---|---|---|---|---|
| WK-12A | DC 12V | 0.8A | 170 | 12V 10W | 9 | 550g |
| WH-24A | DC 24V | 0.5A | | 24V 10W | 10 | |
| WK-24A | | | | | | |
| WH-100A | AC 100V | 0.07A | | 12V 5W | 12 | 750g |
| WK-100A | | | | | | |
| WH-120A | AC 120V | 0.08A | | | | |
| WK-120A | | | | | | |
| WH-200A | AC 200V | 0.04A | | | | |
| WK-200A | | | | | | |
| WKB-12A | DC 12V | 0.85A | | 12V 10W | 9 | 550g |
| WHB-24A | DC 24V | 0.5A | | 24V 10W | 10 | |
| WKB-24A | | | | | | |
| WHB-100A | AC 100V | 0.07A | | 12V 5W | 12 | 750g |
| WKB-100A | | | | | | |
| WHB-120A | AC 120V | | | | | |
| WKB-120A | | | | | | |
| WHB-200A | AC 200V | 0.04A | | | | |
| WKB-200A | | | | | | |

## How to Order

**WK □-□ A □**

Model
WK-A
WH-A

Alarm
None: Without
B: With

Rated Voltage
12 : DC 12V
24 : DC 24V
100: AC 100V
120: AC 120V
200: AC 200V

Color
R: Red
Y: Amber
G: Green
B: Blue



Courtesy of Steven Engineering, Inc. - (800) 258-9200 - sales@steveneng.com - www.stevenengineering.com

# HP

## Revolving Warning Light

Halogen

Φ182

## Large Revolving Warning Light with a solid design.

FEATURES

- Dome is made from superior weather-resistant and light-translucent acrylic resin.
- Main body is made of impact and heat resistant ABS resin.
- Available Voltages are DC 12V and DC 24V.
- Available Colors are Red, Amber, and Blue.
- Utilizes a Halogen Bulb (Sold Separately).

### Specifications

| Model | Rated Voltage | Halogen Bulb<br>Bulb sold seperately | Flash Rate (fpm) | Mass |
|---|---|---|---|---|
| ◎ HP-12 | 12V/24 DC | 0.5A | 160 | 1.0kg |
| ◎ HP-24 | | | | |

◎ Available by Special Order

### How to Order

**HP-□□**

Model

Rated Voltage
12 : DC 12V
24 : DC 24V

Color
R: Red
Y: Amber
B: Blue

### Dimensions

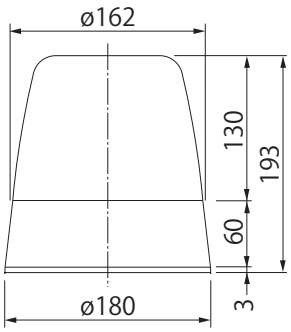


Mounting Dimensions

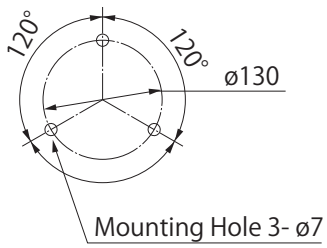


(Unit: mm)

# KG

## Revolving Warning Light

Bulb

IP23

Φ186

Dual-face Reflector

## Large lightweight Revolving Warning Light with dual-face reflector.

FEATURES

- Indoors allows upright, inverted, and sideways installation; outdoors allows upright installation only.
- Main Body is made of a black resin for resistance against harsh weather and UV rays.
- Compact motor with high durability and energy-efficient characteristics.
- The red dome is made of AS resin; the amber dome is made of PS resin.
- Dual-face reflector for a powerful rotary flash.
- Available Colors are in Red and Amber.

*Please contact your local PATLITE representative for other available voltages.

## Specifications

| Model | Rated Voltage | Current Consumption | Flash Rate (fpm) | Bulb | | Mass |
|---|---|---|---|---|---|---|
| | | | | Ratings | Repl. No. | |
| KG-12 | DC 12V | 2.7A | 180 | 12V 35W | 1 | 700g |
| KG-24 | DC 24V | 1.2A | | 24V 35W | 2 | |
| KG-100 | AC 100V | 0.32A | | 120V 40W | 36 | 900g |

## How to Order

**KG-□□**

Model

Rated Voltage
12 : DC 12V
24 : DC 24V
100: AC 100V

Color
R: Red
Y: Amber

## Dimensions

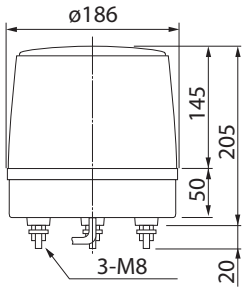


Mounting Dimensions

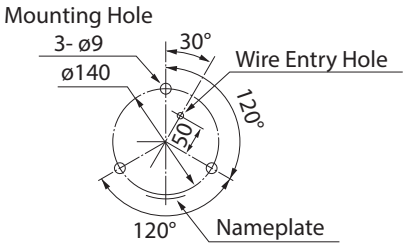


(Unit: mm)



Courtesy of Steven Engineering, Inc. - (800) 258-9200 - sales@steveneng.com - www.stevenengineering.com

# HKFM

## Revolving Warning Light

Halogen

# Compact revolving warning light with cigar lighter plug to attach onto your car for road service.

FEATURES

- Large-sized rotating parabolic reflector to enhance visibility from a distance.
- Cigar lighter plug with a 4m cable for easy power connection.
- Available Colors are in Red, Amber, Green, and Blue.
- Rim-drive motor for a quiet and stable rotation.
- Dome lens is made of polycarbonate resin.

## Specifications

| Model | Rated Voltage | Current Consumption | Flash Rate (fpm) | Bulb | Mass |
|---|---|---|---|---|---|
| HKFM-101 | DC 12V | 2.9A | 230 | 12V 35W | 800g |
| HKFM-102 | DC 24V | 1.9A | | 24V 55W | |

## How to Order

**HKFM** □ - □

Model

Rated Voltage
101 : DC 12V
102 : DC 24V

Color
R: Red
Y: Amber
G: Green
B: Blue

## Dimensions

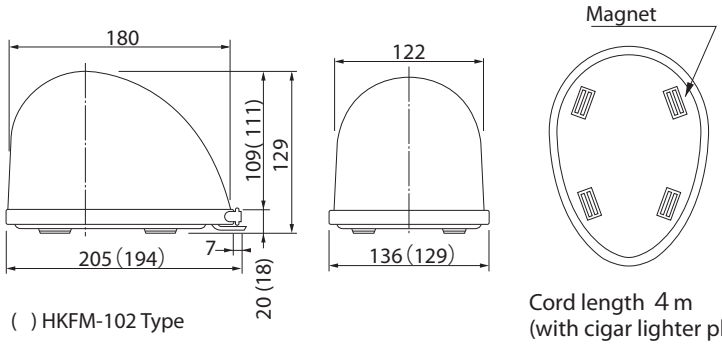


( ) HKFM-102 Type

Cord length 4 m
(with cigar lighter plug)

(Unit: mm)

Courtesy of Steven Engineering, Inc. - (800) 258-9200 - sales@steveneng.com - www.stevenengineering.com

# RLR

## LED Revolving Warning Light

RoHS CE

LED

Φ162

IP66

## Ideal for forklift, material handling equipment and a great variety of applications.

FEATURES

- Has the CE mark and conforms to the requirements (for 12V, 24V, 48V type) for the EC directive.
- Colors available are Red, Amber, Green, and Blue.
- RLR complies with the RoHS Directive.

### LED + Brushless Motor + Bearing Mechanism

## ■ Long Life

The RLR has many advantages in comparison to a rotating beacon using incandescent bulbs and the conventional motor. The LED will last approximately 20 to 40 times longer than an incandescent bulb, and in combination with a brushless motor with bearings, allows the RLR to operate from 8,000 hrs to 10,000 hrs, compared to 5,000 hrs for other rotating beacons.

### Conventional Motor Construction

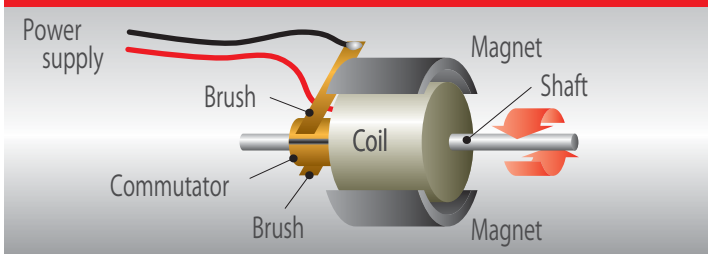


### Brushless Motor Construction

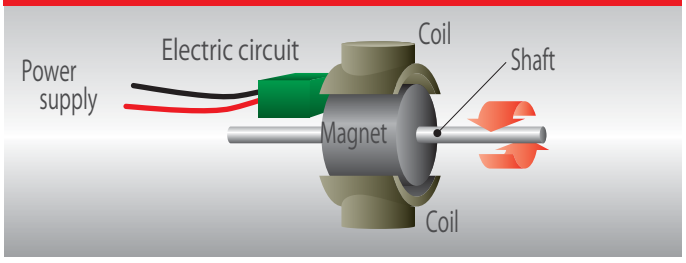




Courtesy of Steven Engineering, Inc. - (800) 258-9200 - sales@steveneng.com - www.stevenengineering.com

Vibration Resistance*

High Visibility

High Protection

## IP66 TEST PROCEDURE

IPX6= Water is sprayed for at least 3 minutes at a flow rate of 100 L/min from a distance between 2.5m to 3.0m, and from all 360°directions using a 12.5mm diameter jet hose nozzle.

IP6X= The target unit is tested under-pressure in a dust chamber for 8 hours.

## How to Order

**Model Code**

**RLR-04-P-R**

**Rated Voltage**
04 : DC 48V
M1 : DC 12-24V
M2 : AC 90~250V

**Color**
R : Red G : Green
Y : Amber B : Blue

**Mounting Dimensions**
Blank : φ140
P : φ120

## Typical Vibration Values

2G (19.6m/s$^2$)

**Passenger Car**

4.5G (44.1m/s$^2$)

**Construction Machinery**

7G (68.6m/s$^2$)

**Emergency Vehicle**

11G (107.8m/s$^2$)

**Dump Trucks**

## Dimensions

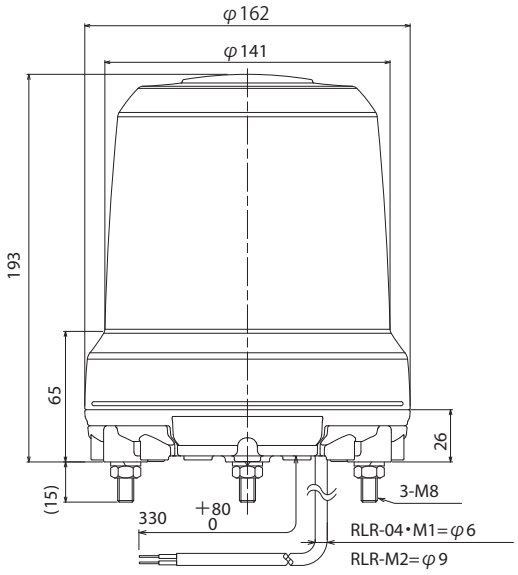


Mounting Dimensions

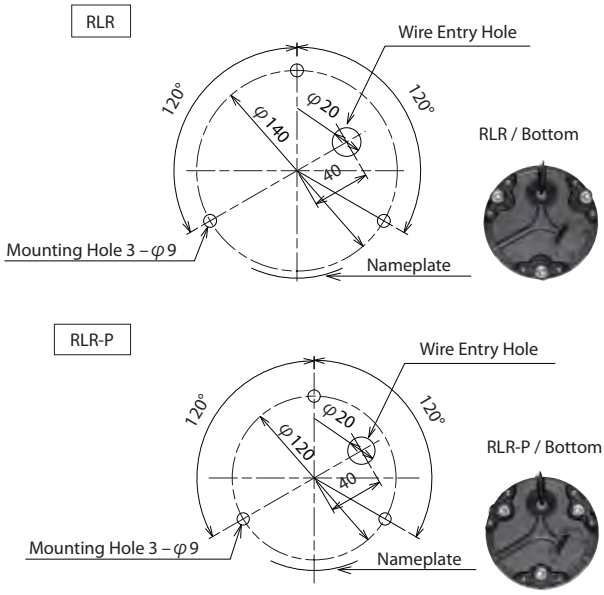


(Unit: mm)

## Specifications

| Model | Rated Voltage | Operating Voltage Range | Vibration Resistance | Operating Temperature Range | Dome | Mass |
|---|---|---|---|---|---|---|
| RLR-M1 | DC 12-24V | DC 9.5V - 15V | 110m/s$^2$ (11G) | -30 C - +70 C | -R (Red) -Y (Amber) -G (Green) -B (Blue) | 1.0kg |
| RLR-04 | DC 48V | DC 20V - 30V | | | | |
| RLR-M2 | AC 90-250V | AC 90V - 250V | 45m/s$^2$ (4.5G) | -10 C - +50 C | | 1.06kg |

# KUS

## Cube Tower

RoHS

LED

Bulb

1 Alarm Sound

80db at 1m

IP54 (Except KUS-B)

□70

# The KUS Series cube tower; uses advanced technology with a modular design to combine two different lights on one unit.

FEATURES

- Light modules can be stacked up to 4 tiers in any color combination.
- RoHS Compliance for Models KUS-24, KUS24F, KUS-EA-R/Y/G/B/C.
- Lenses are made of heat and shock resistant polycarbonate resin.
- Each light has a built-in dip switch to control the light on or off.
- Maximum power consumption of the base unit is 21 watts.
- Light and Base units are sold separately.
- IP rating of IP54 (Except the KUS-B)
- KUS-F flashes 60 times a minute.

## How to Order

Power Unit

**KUS-□-□**

Model

Rated Voltage
- 24 : AC/DC 24V
- 100: AC 100V
- 120: AC 120V
- 220: AC 220V

Lighting Type
- None: Continous
- F : Continous or Flashing
- C : Open Collector Continous
- FC : Open Collector Continuous or Flashing

Module

**KUS-□**

Model

Module Type
- S : Bulb Type
- EA: LED Type
- B : Buzzer Type

## Specifications

| Power Unit | Model | Rated Voltage | Power Consumption | (Image) |
|---|---|---|---|---|
| Continuous Lighting | KUS -24 | AC/DC 24V | 21W | |
| | KUS -100 | AC 100V | | |
| | KUS -120 | AC 120V | | |
| | KUS -220 | AC 220V | | |
| Continuous Lighting or Flashing | KUS -24 F | AC/DC 24V | | |
| | KUS -100 F | AC 100V | | |
| | KUS -120 F | AC 120V | | |
| | KUS -220 F | AC 220V | | |
| Open-Collector Continuous Lighting | KUS -24 C | AC/DC 24V | | |
| | KUS -100 C | AC 100V | | |
| | KUS -120 C | AC 120V | | |
| | KUS -220 C | AC 220V | | |
| Open-Collector Continuous Lighting or Flashing | KUS -24 FC | AC/DC 24V | | |
| | KUS -100 FC | AC 100V | | |
| | KUS -120 FC | AC 120V | | |
| | KUS -220 FC | AC 220V | | |

| Model | Rated Voltage | Power Consumption | Bulb | |
|---|---|---|---|---|
| | | | Ratings | Repl. No. |
| KUS-S (Bulb) | DC 24V | 6W | 24V 6W | 19 |
| KUS-EA (LED) | | R,Y: 1.2W; G,B,C: 0.9W | — | — |

| Model | Rated Voltage | Power Consumption | Volume |
|---|---|---|---|
| KUS-B | DC 24V | 0.5W | 80dB (at 1m) |

Courtesy of Steven Engineering, Inc. - (800) 258-9200 - sales@steveneng.com - www.stevenengineering.com

## Dimensions

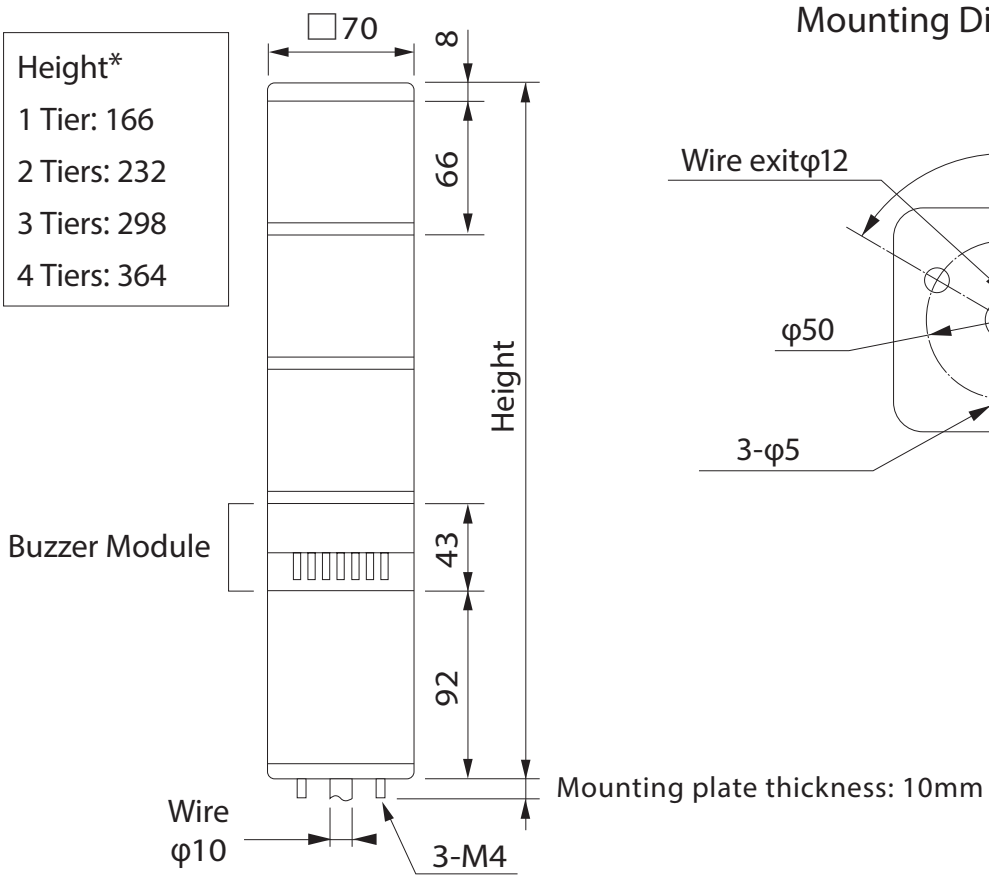


* Buzzer module height not included

### Mounting Dimensions

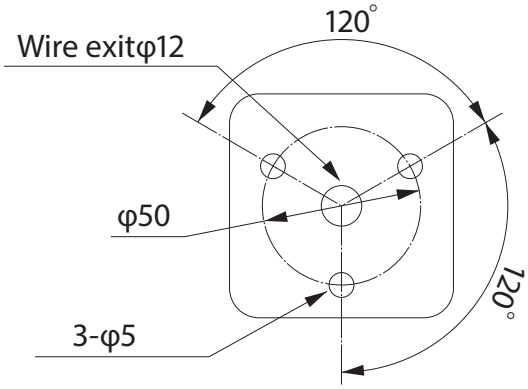


(Unit: mm)

## Wiring

Contact Input Type
（KUS,KUS-F）

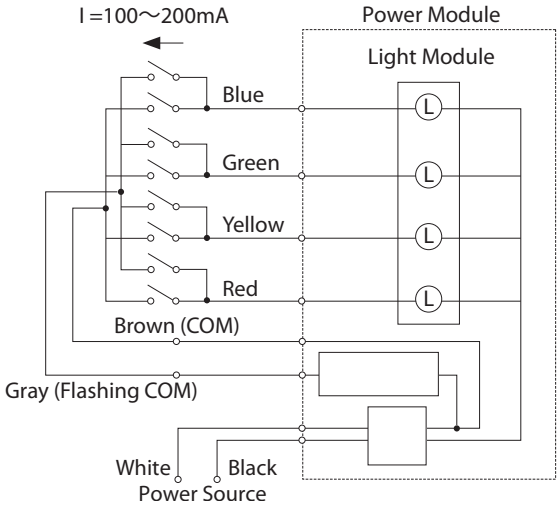


Open-collector Type
(NPN/PNP for KUS-FC,C)

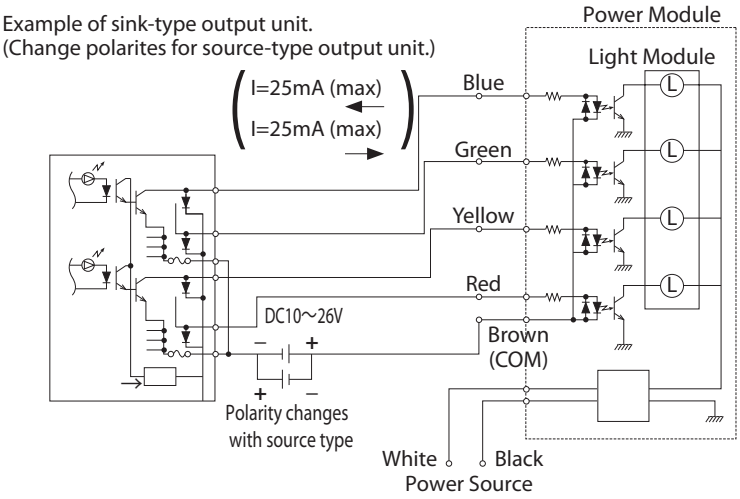




Courtesy of Steven Engineering, Inc. - (800) 258-9200 - sales@steveneng.com - www.stevenengineering.com

# KJS / KJSB

## Cube Tower

ALARM

Model DEB LED Lamp
Recommended Product
For more details on Model DEB
Refer to the "Replacement Bulb"
Section at the end of this Catalog

Bulb

1 Alarm Sound

85dB at 1m (KJSB)

IP23

□82

NPN/PNP
Open-collector

## Lightweight Cube Tower featuring a built-in buzzer designed to fit applications for small equipment.

FEATURES

- Built-in Alarm with intermittent buzzer sound and volume of up to 85dB (at 1m).
- Lens is made of superior weather-resistant and light-translucent AS resin.
- Rotating parabolic reflector to enhance visibility from a distance.
- Main body is made of impact and heat resistant ABS resin.
- Available colors are Red, Amber, Green, and Blue.
- Installation is in the upright position only.
- Flashing cycle of 160 times/min.
- One spare bulb is included.

## How to Order

**KJSB-302-RYG**

Type
B: With audible alarm

Tiers
1~3

Rated Voltage
01: DC 12V
02: DC 24V
10: AC 100V
12: AC 120V
20: AC 220V

Color
R: Red
Y: Amber
G: Green
B: Blue
(Top to bottom)



Courtesy of Steven Engineering, Inc. - (800) 258-9200 - sales@steveneng.com - www.stevenengineering.com

## Dimensions

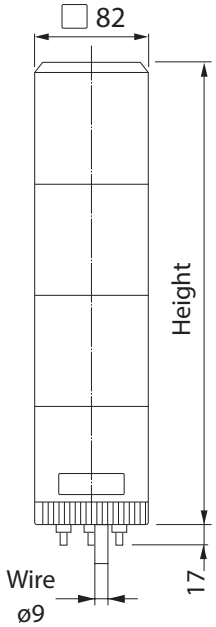


Height
1 Tier : 173
2 Tiers: 256
3 Tiers: 339

### Mounting Dimensions

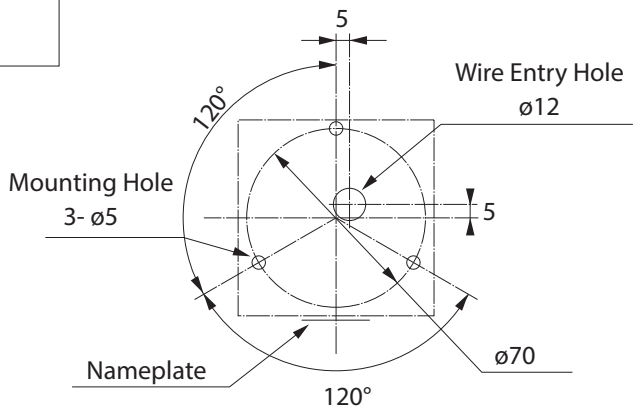


(Unit: mm)

## Wiring

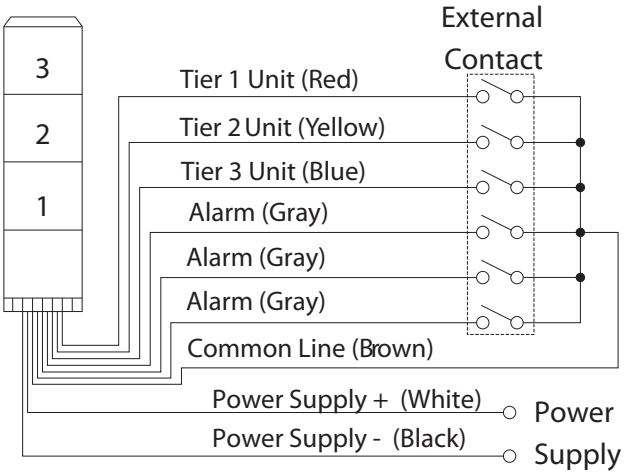


### NPN Open-collector Transistor

Red, Yellow, Blue, Gray

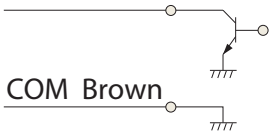

COM Brown

| Current Consumption and Contact Capacity per Module | | | | |
|---|---|---|---|---|
| Rated Voltage | Lamp Wire Current | Alarm Wire Current | Lamp Wire Contact Capacity | Alarm Wire Contact Current |
| DC 12V | 34mA | 100mA | 50mA or more | 300mA or more |
| DC 24V | | | | |
| AC 100V | | | | |
| AC 120V | | | | |
| AC 200V | | | | |

- ⊖ DC Inputs are polarized.
- ⊖ Only the KJSB has Gray wires for alarm input.

## Specifications

| Stack Number | Model | | | Rated Voltage | Power Consumption | Flash Rate (fpm) | Bulb | |
|---|---|---|---|---|---|---|---|---|
| | | | | | | | Ratings | Repl. No. |
| 1 Tier | KJS | KJSB | -101 | DC 12V | 6W | 160 | 12V 5W | 12 |
| | | | -102 | DC 24V | 12W | | 24V 10W | 10 |
| | | | -110 | AC 100V | 8W | | 12V 5W | 12 |
| | | | -112 | AC 120V | | | | |
| | | | -120 | AC 200V | | | | |
| 2 Tiers | KJS | KJSB | -201 | DC 12V | 11W | | 12V 5W | 12 |
| | | | -202 | DC 24V | 24W | | 24V 5W | 10 |
| | | | -210 | AC 100V | 16W | | 12V 5W | 12 |
| | | | -212 | AC 120V | | | | |
| | | | -220 | AC 200V | | | | |
| 3 Tiers | KJS | KJSB | -301 | DC 12V | 16W | | 12V 10W | 9 |
| | | | -302 | DC 24V | 35W | | 24V 10W | 10 |
| | | | -310 | AC 100V | 23W | | 12V 5W | 12 |
| | | | -312 | AC 120V | | | | |
| | | | -320 | AC 200V | | | | |



Courtesy of Steven Engineering, Inc. - (800) 258-9200 - sales@steveneng.com - www.stevenengineering.com

# KJ / KJB

## Cube Tower

Model DEB LED Lamp
Recommended Product
For more details on Model DEB
Refer to the "Replacement Bulb"
Section at the end of this Catalog

Bulb

1 Alarm Sound

85dB at 1m (KJB)

IP23

□116

## Lightweight Cube Tower featuring a built-in buzzer suitable for various indoor applications.

FEATURES

- Built-in Alarm with intermittent buzzer sound and volume of up to 85dB (at 1m).
- Lens is made of superior weather-resistant and light-translucent AS resin.
- Rotating parabolic reflector to enhance visibility from a distance.
- Main body is made of impact and heat resistant ABS resin.
- Available colors are Red, Amber, Green, and Blue.
- Installation is in the upright position only.
- Flashing cycle of 130 times/min.
- One spare bulb is included.

## How to Order

**KJB-302-RYG**

Type
B: With audible alarm

Tiers
1~4

Rated Voltage
02: DC 24V
10: AC 100V
12: AC 120V
20: AC 220V

Color
R: Red
Y: Amber
G: Green
B: Blue
(Top to bottom)

## Specifications

| Stack Number | Model | | | Rated Voltage | Power Consumption | Flash Rate (fpm) | Bulb Ratings | Bulb Repl. No. |
|---|---|---|---|---|---|---|---|---|
| 1 Tier | KJ | KJB | -102 | DC 24V | 13.5W | 130 | 24V 10W | 10 |
| | | | -110 | AC 100V | 6W | | 12V 5W | 12 |
| | | | -112 | AC 120V | 7W | | | |
| | | | -120 | AC 200V | 5.5W | | | |
| 2 Tiers | KJ | KJB | -202 | DC 24V | 25.54W | | 24V 5W | 10 |
| | | | -210 | AC 100V | 11W | | 12V 5W | 12 |
| | | | -212 | AC 120V | 13W | | | |
| | | | -220 | AC 200V | 9.9W | | | |
| 3 Tiers | KJ | KJB | -302 | DC 24V | 37.5W | | 24V 10W | 10 |
| | | | -310 | AC 100V | 16W | | 12V 5W | 12 |
| | | | -312 | AC 120V | 18W | | | |
| | | | -320 | AC 200V | 14.3W | | | |
| 4 Tiers | KJ | KJB | -402 | DC 24V | 49.5W | | 24V 10W | 10 |
| | | | -410 | AC 100V | 21W | | 12V 5W | 12 |
| | | | -412 | AC 120V | 26W | | | |
| | | | -420 | AC 200V | 18.7W | | | |



Courtesy of Steven Engineering, Inc. - (800) 258-9200 - sales@steveneng.com - www.stevenengineering.com

## Dimensions

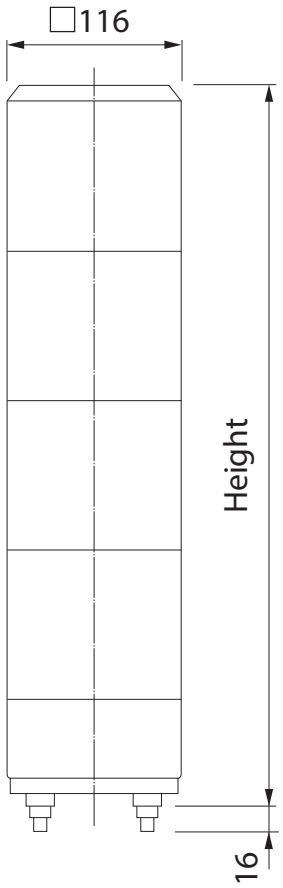


Height
1 Tier : 185
2 Tiers: 290
3 Tiers: 395
4 Tiers: 500

### Mounting Dimensions

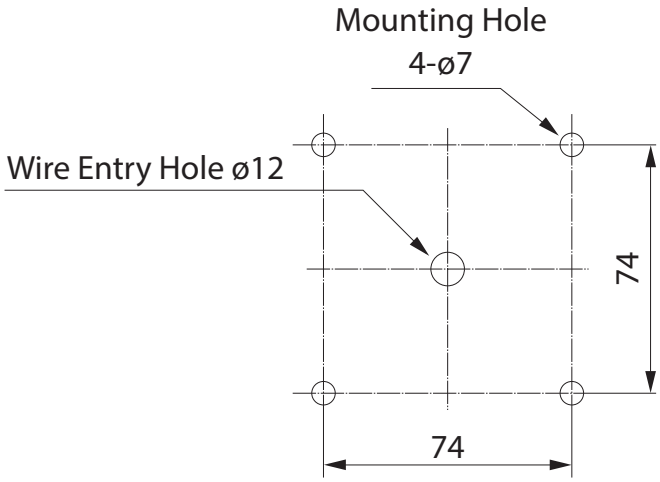


(Unit: mm)

## Wiring Diagram

KJ/KJB (24V DC)

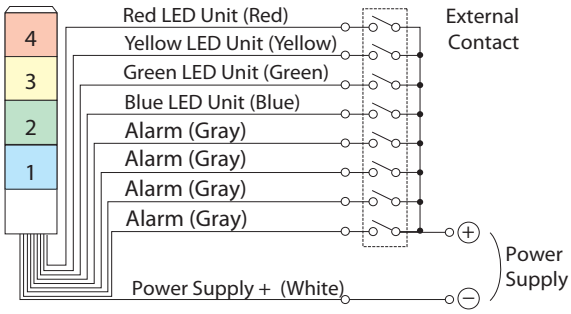


KJ/KJB (100V AC, 220V AC)

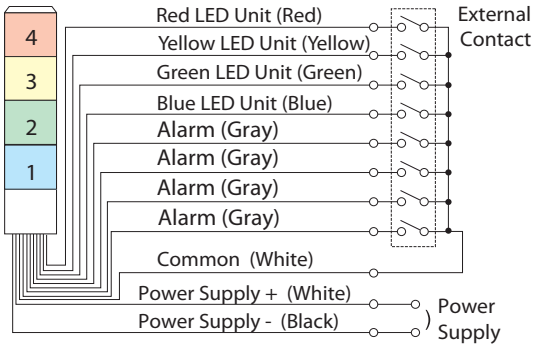


Θ KJ-110/112/120 are voltage-contact type, therefore have no alarm signal wires.
Θ Only the KJB has Gray wires for alarm input.

| Current Consumption and Contact Capacity per Module | | | | | |
|---|---|---|---|---|---|
| Rated Voltage | Signal Wire Current | Inrush Current | External Contact Capacity | Alarm Wire Current | Alarm Wire Inrush Current |
| 24V DC | 0.42A | 4.6A | 5A or more | 60mA | 500mA |
| 100VAC/120VAC/220VAC | | | | | |



Courtesy of Steven Engineering, Inc. - (800) 258-9200 - sales@steveneng.com - www.stevenengineering.com

MEMO

For more details, visit our website at http://www.patlite.com



Courtesy of Steven Engineering, Inc. - (800) 258-9200 - sales@steveneng.com - www.stevenengineering.com

# LED Light

Courtesy of Steven Engineering, Inc. - (800) 258-9200 - sales@steveneng.com - www.stevenengineering.com

# CLA

## LED Light Bar

Daylight, Amber
Natural White

IP66G/67G/69K

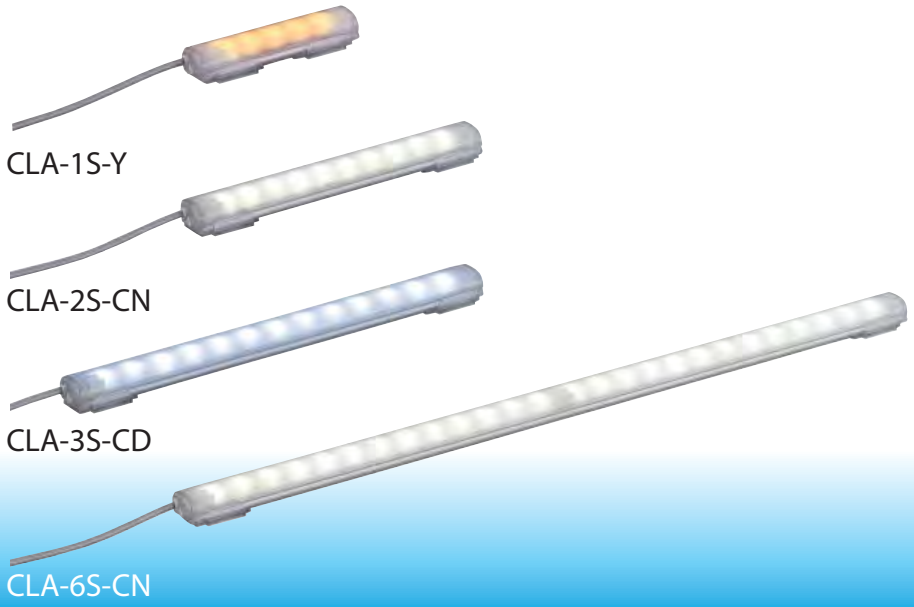


## More than a diffusion LED light bar, it can be used in places like the food-processing industry with its protection rating of "IP69K", which can endure high-pressurized hot water washing.

- Bright, long lasting LED's.
- Suitable for food, beverage and pharmaceutical applications where high-pressure, 80°C high-temperature wash-downs are required. Also meets IP66/67 standards.
- The radiating temperature is reduced to 40 degrees or less (34% reduction in comparison to a 20W fluorescent light), increasing environmental efficiency.
- Seven lengths in the range from 100 to 1500mm to choose from, with three colors (Daylight, Natural White, Amber), and four types of attachments, including a magnet one, offering a potential for various applications.
- The operating temperature range from -40°C to +60°C allows installation in sub-freezing temperatures, such as walk-in freezers.
- It is constructed with strong polycarbonate resin, which is resistant to shock.
- Corresponds to Europe's RoHS Directive.
- Obtained certification for ECOLAB.
- Conforms to CE requirements.
- UL Listed (File No. E306141).

## Lumionous Color

With a high-intensity Illumination, it is suitable for applications such as lighting-up processing machinery workspace or video inspection systems to help highlight more details, etc.

A 6800K daylight light bar at a distance of 50 cm from the center of irradiation has measured a maximum brightness of 400lx.

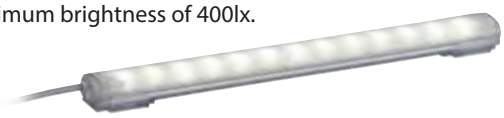

CLA-CN (Natural White: 4800K)

CLA-CD (Daylight:6800K)

CLA-Y (Amber)

## How to Order

**CLA1S-24-CD-30**

Light Bar Length
1 : 100mm
2 : 200mm
3 : 300mm
6 : 600mm
9 : 900mm
12: 1,200mm
15: 1,500mm

Luminous Color
-CD (Daylight)
-CN (Natural White)
-Y (Amber)

Cable Length
Blank : 0.5m
30 : 3.0m

※ -Y is only available in 100mm and 300mm lengths.



Courtesy of Steven Engineering, Inc. - (800) 258-9200 - sales@steveneng.com - www.stevenengineering.com

## Dimensions

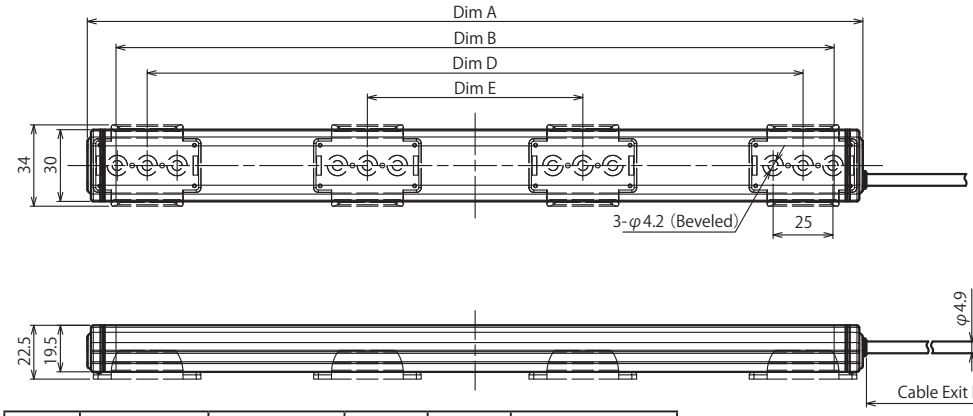


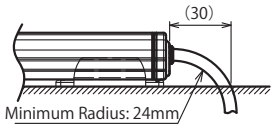


Wiring Example

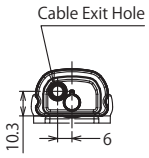


| Model Name | Dim A | Dim B | Dim D | Dim E | Standard Bracket SZ-310AR |
|---|---|---|---|---|---|
| | Total Length | Lighting Area | Mounting Pitch | | |
| CLA1S | 124 | 100 | 74 | — | 2 pcs. |
| CLA2S | 224 | 200 | 174 | — | |
| CLA3S | 324 | 300 | 274 | | |
| CLA6S | 624 | 600 | 574 | | |
| CLA9S | 924 | 900 | 874 | 290 | 4 pcs. |
| CLA12S | 1,224 | 1,200 | 1,174 | 390 | |
| CLA15S | 1,524 | 1,500 | 1,474 | 490 | |

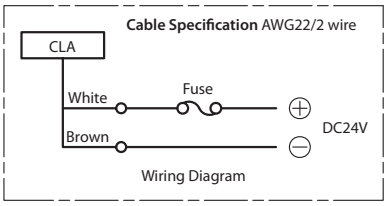


## Options

Rear Attachment
(Screw Mount)
Model SZ-310AR

Rear Attachment
(Magnetic Mount)
Model SZ-310ARM

Side Attachment
(Screw Mount)
Model SZ-310AS

Side Attachment
(CLB-24N Compatible)
Model SZ-310ASB

## Specifications

| Model | Luminous Color | Rated Voltage | Vibration Resistance | Operating Temperature Range | Rated Current Consumption | Center Radiation (lx/50cm) | Main Body Material | Protection Rating | Mass |
|---|---|---|---|---|---|---|---|---|---|
| CLA1S -24 -CD | Daylight | DC 24V (Polarized) | 19.6 m/s² | -40°C - +60°C (RH 90% or less) | 104mA | 140 | Polycarbonate | IP66/67/69K | 80g |
| CLA1S -24 -CN | Natural White | | | | | | | | |
| CLA1S -24 -Y | Amber | | | | | 78 | | | |
| CLA2S -24 -CD | Daylight | | | | 208mA | 270 | | | 130g |
| CLA2S -24 -CN | Natural White | | | | | | | | |
| CLA3S -24 -CD | Daylight | | | | 240mA | 400 | | | 180g |
| CLA3S -24 -CN | Natural White | | | | | | | | |
| CLA3S -24 -Y | Amber | | | | | 220 | | | |
| CLA6S -24 -CD | Daylight | | | | 480mA | 650 | | | 340g |
| CLA6S -24 -CN | Natural White | | | | | | | | |
| CLA9S -24 -CD | Daylight | | | | 720mA | 810 | | | 500g |
| CLA9S -24 -CN | Natural White | | | | | | | | |
| CLA12S -24 -CD | Daylight | | | | 960mA | 890 | | | 660g |
| CLA12S -24 -CN | Natural White | | | | | | | | |
| CLA15S -24 -CD | Daylight | | | | 1,200mA | 945 | | | 820g |
| CLA15S -24 -CN | Natural White | | | | | | | | |



Courtesy of Steven Engineering, Inc. - (800) 258-9200 - sales@steveneng.com - www.stevenengineering.com

# CLK

## LED Light Bar

Daylight
Natural White

IP66G/67G/69K

M-12 Daisylink

(Cable not included)

# Water, Oil and Chemical Resistant LED Light Bar with an Illuminance of 2,100lx. (Measurement based on CLK6S-24AG-CD)

FEATURE

- Attained the IP69K standard for the meat/food processing, beverages and medicine manufacturing industries which demands the waterproofing performance. It also corresponds to IP66G/67G standards.
- Special design to reduce "Blinding Light" effect, reducing the risk of retinal damage (EN62471-2 for Photobiological Safety of Lamps and Lamp Systems).
- The product lineup includes three sizes (200mm, 300mm, 600mm), two colors (Daylight, Natural White), and different series (Side-exit Cable; M12 Quick-disconnect; Aluminum Alloy and Stainless Steel Body) for various applications.
- The operating temperature range from -40°C to +60°C allows installation in sub-freezing temperatures, such as walk-in freezers.
- Slim Profile
- Corresponds to Europe's RoHS Directive.
- Conforms to CE requirements.
- UL Listed (File No. E306141).

## Specifications

| Specifications/Material | | Water and Oil Resistance/Aluminum Alloy | | | | | | | Water and Chemical Resistance/ SUS316 Stainless Steel | |
|---|---|---|---|---|---|---|---|---|---|---|
| Lens Material | | Tempered Glass | | | | | | | Specially-treated Lens◊ | |
| Model | | 2S-AG | 3S-AG | 6S-AG | 3C-AG | 3CL-AG | 6C-AG | 6CL-AG | 3C-SG | 3C-SA |
| Lens Size | | 200mm | 300mm | 600mm | 300mm | | 600mm | | 300mm | |
| LED Color | Daylight: 6,500K: CD | ● | ● | ● | ● | ● | ● | ● | ● | — |
| | Natural White: 5,000K: CN | △ | ● | △ | ● | ● | ● | — | — | ● |
| Center Illumination (@1m) | | 820lx | 1,200lx | 2,100lx | 1,200lx | | 2,100lx | | 1,200lx | |
| Connection Type | | Side-exiting Cable, L=0.5m | | | M12 Quick Disconnect | M12 Daisy Link | M12 Quick Disconnect | M12 Daisy Link | M12 Quick Disconnect | |
| Power Consumption | | 8.4W | 12.5W | 25W | 12.5W | | 25W | | 12.5W | |
| Rated Voltage | | DC 12V (Poloarized) | | | | | | | | |
| Operating Temperature Range | | -40°C - +60°C (RH 90% or less) | | | | | | | | |
| Protection Rating | | IP 66G/67G (IEC 60529)/IP69K (DIN 40050 Part 9) | | | | | | | | |

△ : Inquire before Ordering ◊: Specially-treated lens has three layers embedded; PMMA, Shatter-proof Film, Tempered Glass

## How to Order

Model Code

Model **CLK□□-24□-□**

Illumination Area Size
2: 200mm 3: 300mm 6: 600mm

Wiring Method
S: Side-exiting Cable C: M12 Cable CL: M12 Daisy Link

LED Color
CD: Daylight, CN: Natural White

Body Material AG: Aluminum & Glass
SG: Stainless Steel & Glass
SA: Stainless Steel & Special Lens



Courtesy of Steven Engineering, Inc. - (800) 258-9200 - sales@steveneng.com - www.stevenengineering.com

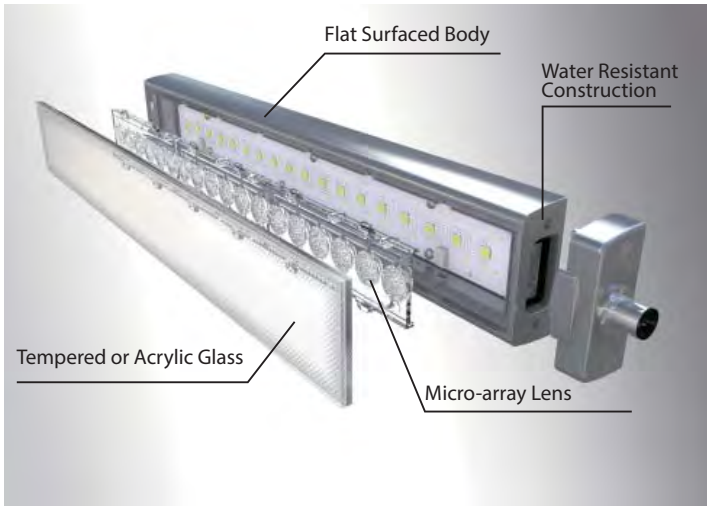


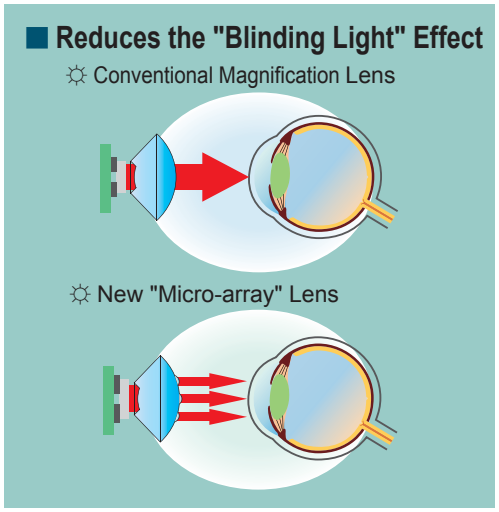


## Angled Body and Flat Surface

The side body angle was designed to prevent dirt accumulation, and for water and oil to roll off the surface. The LED lens retains a simple flat-surface for lighting and to help when wiping it down.

## Reduces the "Blinding Light" Effect

This design conforms to the Photobiological Safety of Lamps and Lamp Systems (Compliance :EN62471- 2) in the Exempt Risk Group, which determines that no immediate retina damage is done.

## One-touch Installation

Just sliding the body onto the bracket makes attachment easy; and it locks in place with a locking screw (which is hidden from the front). (Aluminum Body Only)

## Angle Adjustment Bracket

The Worklight can be freely adjusted up to 60° up and down from the center. (With a scale at 10° step marks and screws to lock it into place.)

## Surface-mounting Bracket

A space-saving flush-mount bracket. (Limited board thickness and lead wire specification of 6mm or less; M12 connector specification of 3mm or less) (Models 3 S-AG/3 C-AG Only)

CLK-001

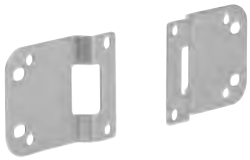

SZ-320KS

SZ-330KP

## M12 Quick Disconnect

4-wire M12 Socket Cable, 5m (No. 1536308)
4-wire M12 SUS Socket Cable, 5m (No. 1552447)

Manufacturer: Phoenix Contact Corp

## Daisy Link at a maximum of 5 Units

4-wire M12 Link Cable, 0.6m (No. 1518892)
4-wire M12 SUS Link Cable, 0.6m (No. 1552638)

Manufacturer: Phoenix Contact Corp

## Product Lineup

| Length \ Specifications | Side-exiting Cable Series (S) | M12 Quick Disconnect Series (C) | M12 Quick Disconnect Daisy Link Series (CL) | Stainless Steel (SUS) Body Series (C-SG/C-SA) |
|---|---|---|---|---|
| 200 mm | 2S 6500K 5000K  | — | — | — |
| 300 mm | 3S 6500K 5000K | 3C 6500K 5000K | 3CL 6500K 5000K * Up to 4 units | 3C 6500K SUS & Special Lens SUS & Special Lens 5000K |
| 600 mm | 6S 6800K | 6C 6500K 5000K | 6CL 6500K 5000K * Only 1 Unit | — |

MEMO

For more details, visit our website at http://www.patlite.com



Courtesy of Steven Engineering, Inc. - (800) 258-9200 - sales@steveneng.com - www.stevenengineering.com

# Alarm Products

Courtesy of Steven Engineering, Inc. - (800) 258-9200 - sales@steveneng.com - www.stevenengineering.com

# BM

## Signal Horn

(AC/DC 24V Only)

**90dB at 1m** (BM-H Type)

**2 Channels**

**IP34** (BM-D Front Only)

**Φ30**

**NPN/PNP Open-collector**

# Compact Signal Horn designed to integrate with control panel, switchboard and other production equipment applications.

FEATURES

- Built-in Alarm with an audible sound of up to 90dB (at 1m*1).
- Has two selectable alarm sound patterns.
- Three Types to choose from; Standard (BM), High Volume (BM-H), Drip-proof (BM-D)
- Body is compact and lightweight (100g).
- The 24V type is compatible with NPN and PNP inputs.
- Has the CE mark and conforms to the requirements for the EC directive. (For AC/DC 24V only.)

*1 Model BM-H: 90dB (at 1m); Model BM: 85dB (at 1m); Model BM-D: 80dB (at 1m)

## How to Order

**BM-202 H**

Model

Rated Voltage
- 202: AC/DC 24V
- 210: AC 100V
- 220: AC 220V

Body Type
- Blank: Standard
- H: High Volume
- D: Drip-proof

## Application Example

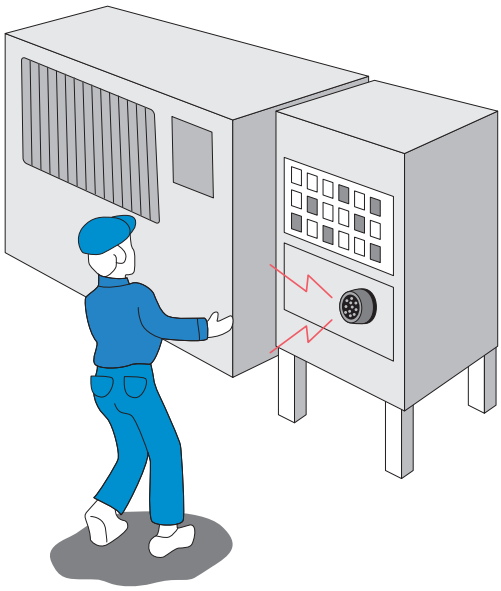



Courtesy of Steven Engineering, Inc. - (800) 258-9200 - sales@steveneng.com - www.stevenengineering.com

## Dimensions

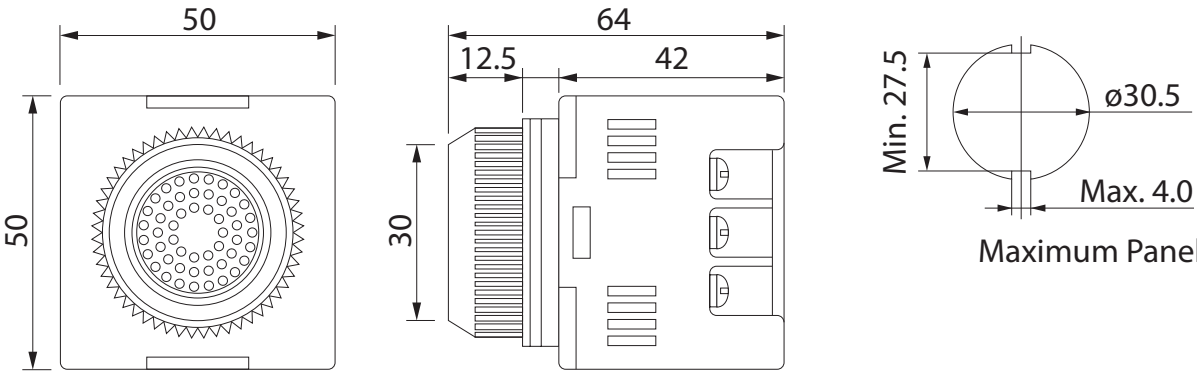


Maximum Panel Thickness: 7

(Unit: mm)

## Wiring

Terminal Bus Input

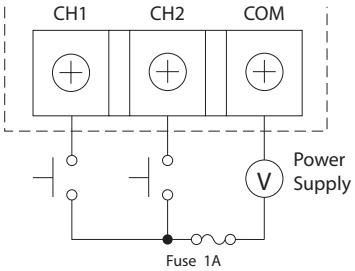


- Channel Priority
  CH1 > Ch2
  CH1 has priority when CH2 and CH1 are activated simultaneously

Rear View

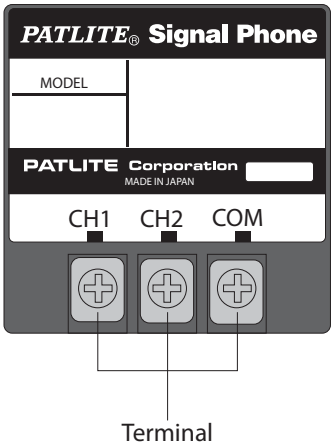


| | |
|---|---|
| External Contact Capacity | No less than 100mA |
| Auxiliary Input | Voltage Contact |
| Input Channels | 2 |

## Specifications

| Type | Model | Rated Voltage | Voltage Range | Power Consumption | Max. Volume (at 1m) | Operating Temperature Range | Protection Rating | Mass |
|---|---|---|---|---|---|---|---|---|
| Standard | BM -202 | AC/DC 24V | AC/DC 22V-26V | 0.4W | 80dB | -10°C - +60°C (RH 85% or less) | — | 100g |
| | BM -210 | AC 100V | AC 90V-110V | 2.5W | 85dB | | | |
| | BM -220 | AC 220V | AC 200V-240V | 3.5W | | | | |
| High Volume | BM -202H | AC/DC 24V | AC/DC 22V-26V | 0.4W | 85dB | | | |
| | BM -210H | AC 100V | AC 90V-110V | 2.5W | 90dB | | | |
| | BM -212H | AC 120V | AC 108V-132V | | | | | |
| | BM -220H | AC 220V | AC 200V-240V | 3.5W | | | | |
| Drip-proof | BM -202D | AC/DC 24V | AC/DC 22V-26V | 0.4W | 75dB | | IP34 | |
| | BM -210D | AC 100V | AC 90V-110V | 2.5W | 80dB | | | |
| | BM -220D | AC 220V | AC 200V-240V | 3.5W | | | | |



Courtesy of Steven Engineering, Inc. - (800) 258-9200 - sales@steveneng.com - www.stevenengineering.com

# BD

## Audible Alarm

RoHS

AC/DC 24V Only

AC/DC 24V Only

90dB at 1m

4 Channels / 32 Sounds

IP54

□80

NPN Open-collector

# The BD Series can play melodies, chimes and alarms with variable audible control and a compact, but loud speaker.

FEATURES

- Maximum output level of 90dB (at 1m) is suitable for use in a noisy factory.
- 32 pre-recorded sounds in one unit to be used for various applications.
- Sound output level and sound group can be selected by rotary switches stored behind the front panel for easier operation, even after installation.
- Select a sound group to playback 4 pre-recorded sounds.
- A new sound group can be created from the 32 sounds by using an optional memory card (sold separately).
- Compliant with the RoHS directive
- Has the CE mark and conforms to the requirements (for 12V/24V type) for the EC directive.
- Is a UL recognized component (File No. E24210).

AVAILABLE BY SPECIAL ORDER

- Binary input controlled 15 sound playback model.
- PNP open collector transistor type.

## Dimensions

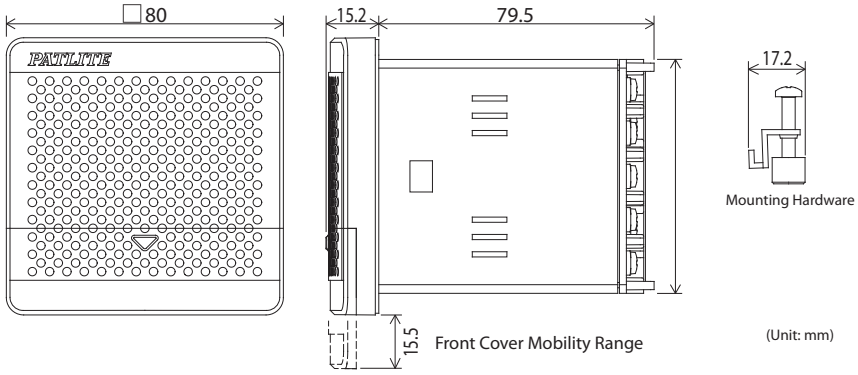


## How to Order

**BD-24A-J**

Rated Voltage
24 : DC 24V
100: AC 100V/220V

Sound Type
A: Type A*
C: Type C*
D: Type D*
E: Type E

Color
J: Ivory White
K: Dark Gray

*Copyright laws limits availability to Japan only.

Courtesy of Steven Engineering, Inc. - (800) 258-9200 - sales@steveneng.com - www.stevenengineering.com

# Wiring

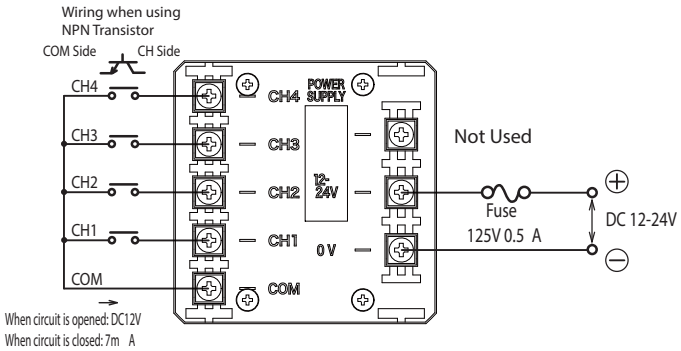


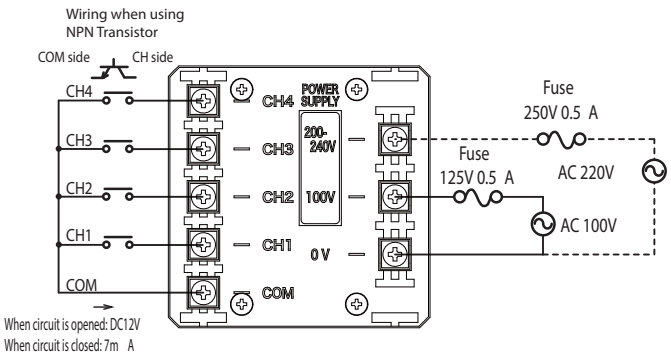


# Melody List

| Type A | | | (Japan Only) |
|---|---|---|---|
| Beep (slow intermittent) | Stutter (rapid intermittent) | Bell (clear high-pitch) | Yelp (rapid siren) |
| Rapid Hi-Lo | Melody Chime | Synthesized Piano | Synthesized Bell |
| Stutter + Bell | Synthesized Melody Chime | Chime | Call Sign |
| Fur Elise | Maiden's Prayer | Bach Minuet in Gmaj | Annie Laurie |
| London Bridge is falling down | Hol-di-ri-Dia | Mary had a little Lamb | Camptown Races |
| Cuckoo Song | Village Blacksmith | On the Bridge of Avignon | Daydream Believer |
| Amaryllis | Mozart Symphony No. 40 | Quiet Lakeside | Ich bin ein Musikante |
| Spanish Romance | Katyusha | Grandfather's Clock | Ave Maria |

| Type D | | | (Japan Only) |
|---|---|---|---|
| Beep (slow intermittent) | Stutter (rapid intermittent) | Bell (clear high-pitch) | Yelp (rapid siren) |
| Rapid Hi-Lo | Melody Chime | Synthesized Piano | Synthesized Bell |
| Runner | Mamotte Agetai | Chime | Call Sign |
| Iribiao Kikinagara | September | Doyoubino Koibito | Akino Kehai |
| Saafu Tengoku Sukii Tengoku | Iro White-blend | Happy Birthday | Hi Ho |
| I've been working on the Railroad | The Bear Song | Toys Go "Cha-cha-cha" | Konnako Irukana |
| Schubert's Lullaby | Rudolph the red-nosed Reindeer | She Wore a Yellow Ribbon | My Darling, Clementine |
| Yellow Rose of Texas | Yankee Doodle | When the Saints Go Marching In | Londonderry Air |

| Type C | | | (Japan Only) |
|---|---|---|---|
| Beep (slow intermittent) | Stutter (rapid intermittent) | Bell (clear high-pitch) | Yelp (rapid siren) |
| Rapid Hi-Lo | Melody Chime | Synthesized Piano | Synthesized Bell |
| Stutter + Bell | Synthesized Melody Chime | Chime | Call Sign |
| Can't take my eyes off of you | Top of the World | The Entertainer | Amazing Grace |
| Amairono Kamino Otome | Les Champs-Elysees | Canon | Rara Sunshine |
| Uchuusenkan Yamamoto | Oshiete | Makenaide | Gonna Fly Now (Theme from "Rocky") |
| I don't Wanna Miss a Thing | Yozorano Mukou | Aiwa Katsu | Haruyo Koi |
| Gattsudaze | Odoru Ponpokorin | Imasugu Kisu Mi | Truth |

| Type E | | | (Worldwide) |
|---|---|---|---|
| Beep (slow intermittent) | Stutter + Bell | Inverted Reveille | Annie Laurie |
| Stutter (rapid intermittent) | Melody Chime | Galactic Motor | London Bridge is falling down |
| Bell (clear high-pitch) | Chime | Ringing Phone | Mary had a little Lamb |
| Yelp (rapid siren) | Call Sign | Two Tone | Camptown Races |
| Rapid Hi-Lo | Train Ride | Alarm Clock | Amaryllis |
| Melody Chime | Galloping Hi-Lo | Ringing Hi-Lo | Mozart Symphony No. 40 |
| Synthesized Piano | Alien Chatter | Fur Elise | Ave Maria |
| Synthesized Bell | Falling Crystals | Bach Minuet in Gmaj | Grandfather's Clock |

# Specifications

| Model | BD-24 □ | BD-100 □ |
|---|---|---|
| Rated Voltage | DC 12V - 24V | AC 100V/AC 220V (50/60Hz) |
| Operating Voltage Range | DC 10.8V- 26.4V | AC 100V ±10%/AC 200V ±10% |
| Operating Temperature Range | -20°C - +50°C | |
| Relative Humidity | 85% RH (No Condensation) | |
| Power Consumption | Maximum 4W | Maximum 6W |
| Volume | Adjustable up to a maximum of 90dB (at 1m) when flushmounted. (Volume may be less, depending on surrounding environment and playback sound) | |
| Input Method | Bit Input | |
| Input Signal Duration | Continuous | |
| Boot-up Time | Input Voltage: 1 sec. or less Channel Signal Input: 170msec or less | |
| Channels | 4 Channels | |
| Recorded Sound | 32 Melodies and Alarm Sounds | |
| Sound Group | 16 Patterns (A to P) | |
| Protection Rating | IP54 (When flush-mounted, Upright direction Only) | |
| Vibration Resistance | 19.6m/s$^2$ | |
| Mass | 205 g ±10% | 325 g ±10% |

## Use of Copyrighted Material

PATLITE Corporation has not applied for permission to use certain copyrighted music or songs recorded for Type-A, Type-C, and Type-D melody charts outside of Japan. Therefore, please contact the local copyright association for permission before using the product in case this product is used outside of Japan. Melody charts Type-E is recommended for use outside of Japan as this playlist does not include copyrighted music or songs, and permission is not required.



Courtesy of Steven Engineering, Inc. - (800) 258-9200 - sales@steveneng.com - www.stevenengineering.com

# BK

## Audible Alarm

RoHS AC/DC 24V Only

CE AC/DC 24V Only

**95dB at 1m**

**8 Channels / 32 Sounds**

**IP54**

**□120**

**NPN Open-collector**

# The BK Series can play melodies, chimes and alarms with variable audible control and a compact but loud speaker.

FEATURES

- 32 pre-recorded sounds in one unit to be used for various applications.
- Maximum output level of 90dB (at 1m) is suitable for use in a noisy factory.
- Rotary switch to easily change sound groups and adjust volume output from the front panel, even after installation.
- Use bit input to select a sound group to playback 8 pre-recorded sounds.
- A new sound group can be created from the 32 sounds by using an optional memory card (sold separately).
- Compliant with the RoHS directive
- Has the CE mark and conforms to the requirements (for 12V/24V type) for the EC directive.
- Is a UL recognized component (File No. E24210).

AVAILABLE BY SPECIAL ORDER

- PNP open collector transistor type.

## Dimensions

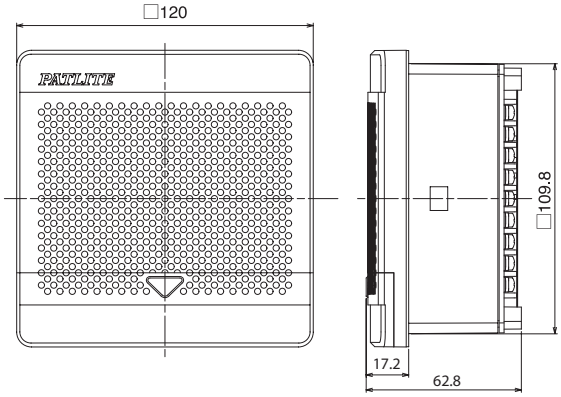


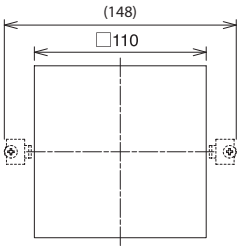


Mounting Dimensions

(Unit: mm)

## How to Order

**BK-24A-J**

Model

Rated Voltage
24 : DC 12-24V
100: AC 100V
220: AC 220V

Sound Type
A: Type A*
C: Type C*
D: Type D*
E: Type E

Color
J: Light Gray
K: Dark Gray

*Copyright laws limits availability to Japan only.

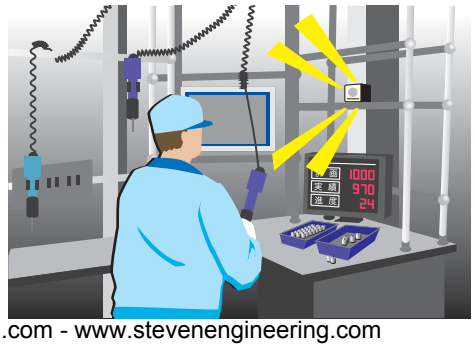



Courtesy of Steven Engineering, Inc. - (800) 258-9200 - sales@steveneng.com - www.stevenengineering.com

# Wiring

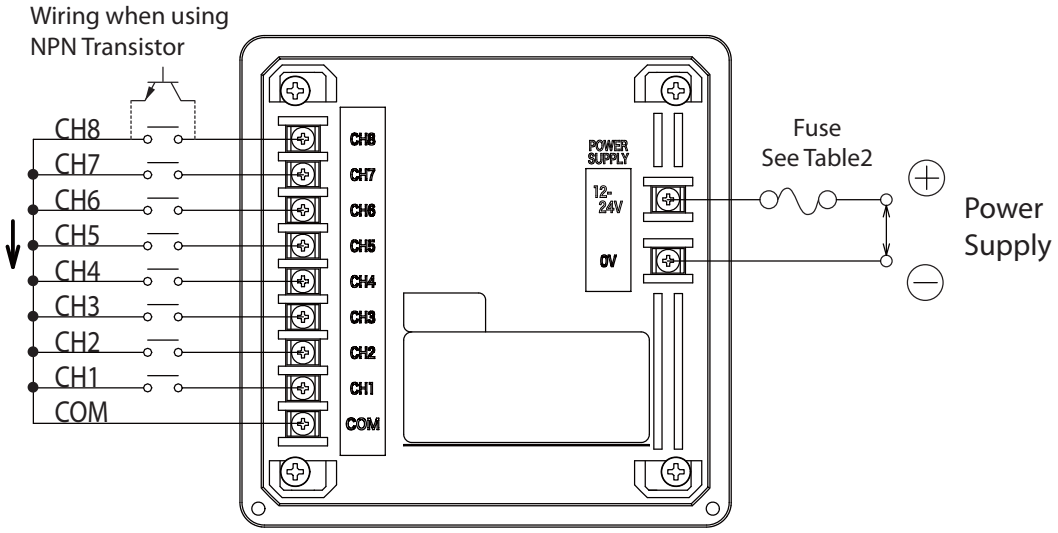


# Melody List

| Type A | | | (Japan Only) |
|---|---|---|---|
| Beep (slow intermittent) | Stutter (rapid intermittent) | Bell (clear high-pitch) | Yelp (rapid siren) |
| Rapid Hi-Lo | Melody Chime | Synthesized Piano | Synthesized Bell |
| Stutter + Bell | Synthesized Melody Chime | Chime | Call Sign |
| Fur Elise | Maiden's Prayer | Bach Minuet in Gmaj | Annie Laurie |
| London Bridge is falling down | Hol-di-ri-Dia | Mary had a little Lamb | Camptown Races |
| Cuckoo Song | Village Blacksmith | On the Bridge of Avignon | Daydream Believer |
| Amaryllis | Mozart Symphony No. 40 | Quiet Lakeside | Ich bin ein Musikante |
| Spanish Romance | Katyusha | Grandfather's Clock | Ave Maria |

| Type D | | | (Japan Only) |
|---|---|---|---|
| Beep (slow intermittent) | Stutter (rapid intermittent) | Bell (clear high-pitch) | Yelp (rapid siren) |
| Rapid Hi-Lo | Melody Chime | Synthesized Piano | Synthesized Bell |
| Runner | Mamotte Agetai | Chime | Call Sign |
| Iribiao Kikinagara | September | Doyoubino Koibito | Akino Kehai |
| Saafu Tengoku Sukii Tengoku | Iro White-blend | Happy Birthday | Hi Ho |
| I've been working on the Railroad | The Bear Song | Toys Go "Cha-cha-cha" | Konnako Irukana |
| Schubert's Lullaby | Rudolph the red-nosed Reindeer | She Wore a Yellow Ribbon | My Darling, Clementine |
| Yellow Rose of Texas | Yankee Doodle | When the Saints Go Marching In | Londonderry Air |

| Type C | | | (Japan Only) |
|---|---|---|---|
| Beep (slow intermittent) | Stutter (rapid intermittent) | Bell (clear high-pitch) | Yelp (rapid siren) |
| Rapid Hi-Lo | Melody Chime | Synthesized Piano | Synthesized Bell |
| Stutter + Bell | Synthesized Melody Chime | Chime | Call Sign |
| Can't take my eyes off of you | Top of the World | The Entertainer | Amazing Grace |
| Amairono Kamino Otome | Les Champs-Elysees | Canon | Rara Sunshine |
| Uchuusenkan Yamamoto | Oshiete | Makenaide | Gonna Fly Now (Theme from "Rocky") |
| I don't Wanna Miss a Thing | Yozorano Mukou | Aiwa Katsu | Haruyo Koi |
| Gattsudaze | Odoru Ponpokorin | Imasugu Kisu Mi | Truth |

| Type E | | | (Worldwide) |
|---|---|---|---|
| Beep (slow intermittent) | Stutter + Bell | Inverted Reveille | Annie Laurie |
| Stutter (rapid intermittent) | Melody Chime | Galactic Motor | London Bridge is falling down |
| Bell (clear high-pitch) | Chime | Ringing Phone | Mary had a little Lamb |
| Yelp (rapid siren) | Call Sign | Two Tone | Camptown Races |
| Rapid Hi-Lo | Train Ride | Alarm Clock | Amaryllis |
| Melody Chime | Galloping Hi-Lo | Ringing Hi-Lo | Mozart Symphony No. 40 |
| Synthesized Piano | Alien Chatter | Fur Elise | Ave Maria |
| Synthesized Bell | Falling Crystals | Bach Minuet in Gmaj | Grandfather's Clock |

# Specifications

| Model | BK-24□ | BK-100□ | BK-220□ |
|---|---|---|---|
| Rated Voltage | DC 12V-24V | AC 100V (50/60Hz) | AC 220V (50/60Hz) |
| Operating Voltage Range | DC 10.8V- 26.4V | AC 100V ±10% | AC 200V ±10% |
| Operating Temperature Range | -20°C - +50°C | | |
| Relative Humidity | 85% RH (No Condensation) | | |
| Power Consumption | Maximum 4W | Maximum 5W | |
| Volume | Adjustable up to a maximum of 90dB (at 1m) when flushmounted. (Volume may be less, depending on surrounding environment and playback sound) | | |
| Input Method | Bit Input | | |
| Input Signal Duration | Continuous | | |
| Boot-up Time | Input Voltage: 1 sec. or less Channel Signal Input: 170msec or less | | |
| Channels | 4 Channels | | |
| Recorded Sound | 32 Melodies and Alarm Sounds | | |
| Sound Group | 16 Patterns (A to P) | | |
| Protection Rating | IP54 (When flush-mounted, Upright direction Only) | | |
| Vibration Resistance | 19.6m/s$^2$ | | |
| Mass | 205 g ±10% | 325 g ±10% | |

**Use of Copyrighted Material**

PATLITE Corporation has not applied for permission to use certain copyrighted music or songs recorded for Type-A, Type-C, and Type-D melody charts outside of Japan. Therefore, please contact the local copyright association for permission before using the product in case this product is used outside of Japan. Melody charts Type-E is recommended for use outside of Japan as this playlist does not include copyrighted music or songs, and permission is not required.



Courtesy of Steven Engineering, Inc. - (800) 258-9200 - sales@steveneng.com - www.stevenengineering.com

# EWHS

## Signal Horn

105dB at 1m

1 Channel / 32 Sounds

IP65 (Available by Special Order

Cable

NPN/PNP Open-collector

# Original wide horn design featuring a high volume of up to 105dB (at 1m), designed for use in noisy environments.

FEATURES

- Select 1 channel from the 32 pre-recorded sounds using the built-in DIP Switch.
- Enhanced for durability and safety in the work environment.
- Adjustable audible sound of up to 105dB (at 1m) with volume control.
- Indoor installation for upright, inverted and sideways position; upright only for outdoors. (Do not install with the horn facing upward).
- Has the CE mark and conforms to the requirements (for 12V, 24V type) for the CE directive.
- Anti-corrosive stainless steel mounting bracket makes installation easier.

## Specifications

| Model | | Rated Voltage | Voltage Range | Power Consumption | Protection Rating | Operating Temperature Range | Sound Pressure (at 1m) | External Contact Capacity | Channel Inputs | Mass |
|---|---|---|---|---|---|---|---|---|---|---|
| EWHS | EWHS -24 | AC/DC 12-24V | AC 8 - 28V DC 9 - 35V | 8W | IP54 (IP65 by Special Order) | -20°C to +60°C 85% RH or less | 105dB | 5A or more | 1CH | 1.2kg |
| | EWHS -48 | DC 48V | DC 35 - 60V | 10W | | | | | | |
| | EWHS -100 | AC 100V | AC 90 - 132V | 12W | | | | | | 1.4kg |
| | EWHS -200 | AC 200V | AC 180 - 260V | 13W | | | | | | |



Courtesy of Steven Engineering, Inc. - (800) 258-9200 - sales@steveneng.com - www.stevenengineering.com

## Dimensions

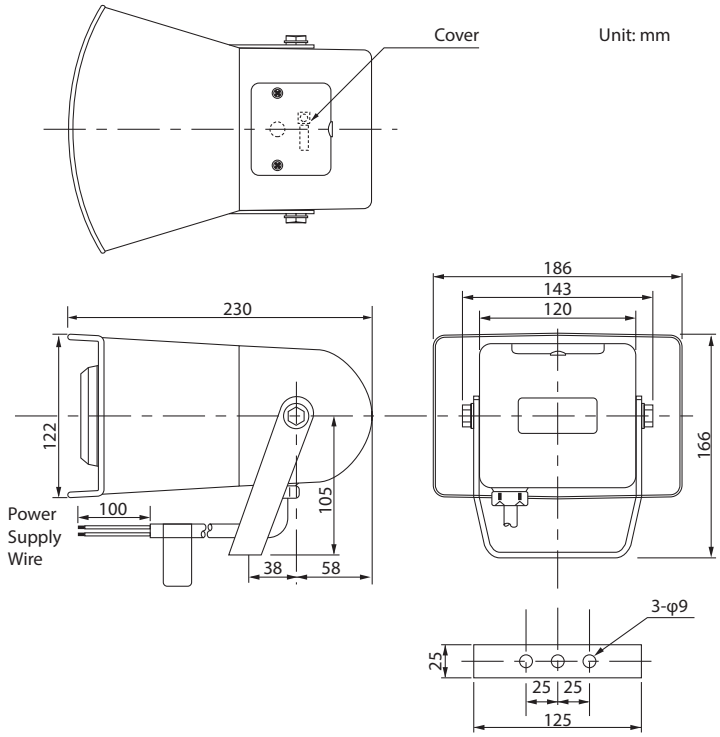


## How to Order

**EWHS-24A-J**

Model
EWHS: 1 channel

Rated Voltage
24 : AC/DC 12/24V
48 : DC 48V
100: AC 100V
200: AC 200V

Sound Type
A: Type A*
C: Type C*
D: Type D*
E: Type E

Body Color
J: Ivory White
Y: Yellow
R : Red

*Copyright laws limits availability to Japan only.

### Use of Copyrighted Material

PATLITE Corporation has not applied for permission to use certain copyrighted music or songs recorded for Type-A, Type-C, and Type-D melody charts outside of Japan. Therefore, please contact the local copyright association for permission before using the product in case this product is used outside of Japan. Melody charts Type-E is recommended for use outside of Japan as this playlist does not include copyrighted music or songs, and permission is not required.

| Type A | | | (Japan Only) |
|---|---|---|---|
| Beep (slow intermittent) | Stutter (rapid intermittent) | Bell (clear high-pitch) | Yelp (rapid siren) |
| Rapid Hi-Lo | Melody Chime | Synthesized Piano | Synthesized Bell |
| Stutter + Bell | Synthesized Melody Chime | Chime | Call Sign |
| Fur Elise | Maiden's Prayer | Bach Minuet in Gmaj | Annie Laurie |
| London Bridge is falling down | Hol-di-ri-Dia | Mary had a little Lamb | Camptown Races |
| Cuckoo Song | Village Blacksmith | On the Bridge of Avignon | Daydream Believer |
| Amaryllis | Mozart Symphony No. 40 | Quiet Lakeside | Ich bin ein Musikante |
| Spanish Romance | Katyusha | Grandfather's Clock | Ave Maria |

| Type D | | | (Japan Only) |
|---|---|---|---|
| Beep (slow intermittent) | Stutter (rapid intermittent) | Bell (clear high-pitch) | Yelp (rapid siren) |
| Rapid Hi-Lo | Melody Chime | Synthesized Piano | Synthesized Bell |
| Runner | Mamotte Agetai | Chime | Call Sign |
| Iribiao Kikinagara | September | Doyoubino Koibito | Akino Kehai |
| Saafu Tengoku Sukii Tengoku | Iro White-blend | Happy Birthday | Hi Ho |
| I've been working on the Railroad | The Bear Song | Toys Go "Cha-cha-cha" | Konnako Irukana |
| Schubert's Lullaby | Rudolph the red-nosed Reindeer | She Wore a Yellow Ribbon | My Darling, Clementine |
| Yellow Rose of Texas | Yankee Doodle | When the Saints Go Marching In | Londonderry Air |

| Type C | | | (Japan Only) |
|---|---|---|---|
| Beep (slow intermittent) | Stutter (rapid intermittent) | Bell (clear high-pitch) | Yelp (rapid siren) |
| Rapid Hi-Lo | Melody Chime | Synthesized Piano | Synthesized Bell |
| Stutter + Bell | Synthesized Melody Chime | Chime | Call Sign |
| Can't take my eyes off of you | Top of the World | The Entertainer | Amazing Grace |
| Amairono Kamino Otome | Les Champs-Elysees | Canon | Rara Sunshine |
| Uchuusenkan Yamamoto | Oshiete | Makenaide | Gonna Fly Now (Theme from "Rocky") |
| I don't Wanna Miss a Thing | Yozorano Mukou | Aiwa Katsu | Haruyo Koi |
| Gattsudaze | Odoru Ponpokorin | Imasugu Kisu Mi | Truth |

| Type E | | | (Worldwide) |
|---|---|---|---|
| Beep (slow intermittent) | Stutter + Bell | Inverted Reveille | Annie Laurie |
| Stutter (rapid intermittent) | Melody Chime | Galactic Motor | London Bridge is falling down |
| Bell (clear high-pitch) | Chime | Ringing Phone | Mary had a little Lamb |
| Yelp (rapid siren) | Call Sign | Two Tone | Camptown Races |
| Rapid Hi-Lo | Train Ride | Alarm Clock | Amaryllis |
| Melody Chime | Galloping Hi-Lo | Ringing Hi-Lo | Mozart Symphony No. 40 |
| Synthesized Piano | Alien Chatter | Fur Elise | Ave Maria |
| Synthesized Bell | Falling Crystals | Bach Minuet in Gmaj | Grandfather's Clock |

## Wiring

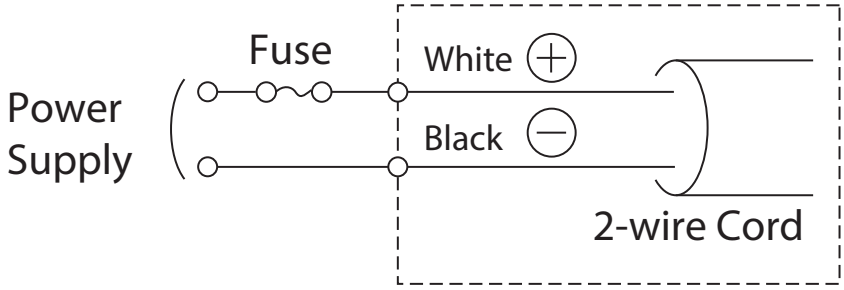




Courtesy of Steven Engineering, Inc. - (800) 258-9200 - sales@steveneng.com - www.stevenengineering.com

MEMO

For more details, visit our website at http://www.patlite.com



Courtesy of Steven Engineering, Inc. - (800) 258-9200 - sales@steveneng.com - www.stevenengineering.com

# Voice & Sound

Courtesy of Steven Engineering, Inc. - (800) 258-9200 - sales@steveneng.com - www.stevenengineering.com

Model EHV

Model BSV

Model BDV

Model BKV

Model LKEH

Model RFV

Model FV-127JP

## STEP 1 Get the New Playlist Editor 2

The Playlist Editor 2 is free from PATLITE. Download the PATLITE Playlist Editor 2 from our Global Home Page, or contact us by E-mail, which can be located on the back of this catalog.

## STEP 2 Get the Recommended SD Card (Model SDV-2GP)

The SDV-2GP is an SD Card approved and supplied by PATLITE.
(The PATLITE Corporation is a member of the SD Card Association.)

## STEP 3 Create the MP3 messages

Convert any message into MP3 data.
(Remove "ID3" tags and be sure the sample rate is the standard rate of 64kb/sec for PATLITE products and the SD Card is formatted for "FAT16".)

## STEP 4 Save the MP3 messages on the SD Card

Use the Playlist Editor 2 to create a playlist and save it on an SD Card.
(Refer to the product manual for detailed information)

## STEP 5 Load the MP3 Data into the Product

Programming can be done right out in the field!
Insert the SD Card into the Product's SD Card slot and listen for the Beep that tells it's programming (Refer to the product manual for detailed information on programming).



Courtesy of Steven Engineering, Inc. - (800) 258-9200 - sales@steveneng.com - www.stevenengineering.com

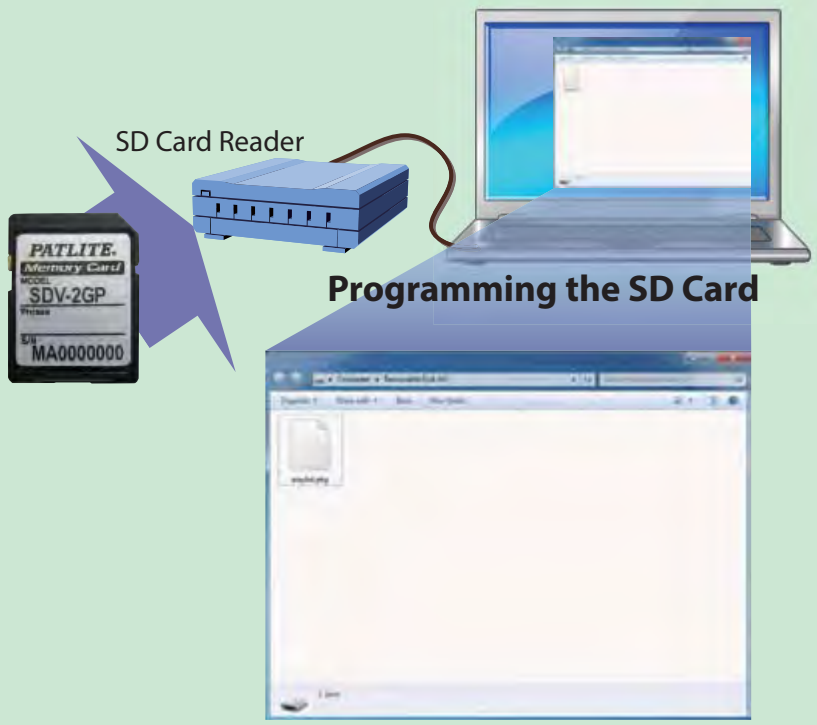


## PATLITE Playlist Editor 2

**Create any Playlist using Playlist Editor2**

**With PATLITE's downloadable Playlist Editor2 from the Web, and most Windows OS software;**

### Playlist Editor 2 Overview

1. Decide on the sounds and messages for Channels and Phrases
2. Start the Software.

1. Insert the sound or message files into appropriate channels and phrases
2. Save as "playlist.slp" after all files are installed
3. The playlist creation is completed.

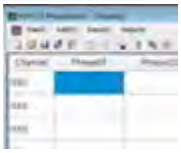

## Get the Necessary Items:

1. An SD Card to save the data onto for rewriting (Recommended Parts : option part SDV-2GP)
2. Personal Computer with all hardware operating normally.
3. SD card reader/writer (if one is not built inside the personal computer)
4. Application Software (PATLITE Playlist Editor 2)
   Corresponding OS: Windows® XP, Windows Vista™ 32 bits/64 bit, Windows® 7 32bit/64 bit, Windows® 8 32bit/64 bit.

* Writing data onto the SD Card with a computer can be done without the PATLITE Playlist Editor 2, but some functions may be limited. (Refer to the product manual for mor-e details)

## Example (EHV)

1. Remove the cover to access the SD Card Slot. (Refer to the product manual for more details)
2. After inserting the SD Card with the stored data into the slot, a high-low beep will sound to indicate rewriting has begun.
3. When a short beep sound is heard, it indicates the rewriting sequence is complete and the SD Card can be removed from the slot.
   * Rewriting should be completed within 60 seconds. The rewriting is not successfully completed if beeping sounds other than indicated above are heard, or when there is no response (Refer to the product manual for more details). In addition, if the volume has been minimized, the beeping sounds cannot be heard.
4. Playback the channels to verify the rewriting has been successful. (Refer to the product manual for more details)

Table: Corresponding Application Software

| Application Software | Usable | Outline |
|---|---|---|
| PATLITE Playlist Editor 2 | All PATLITE Products | This is a newer version of the PATLITE Playlist Editor. A playlist package can be created and the MP3 data and channel function assignment for the product can be rewritten. |
| FV-Win | Limited PATLITE Products (Products prior to the EHV) | This product is not compatible with the playlist created by FV-Win or the PATLITE Playlist Editor. However, the playlist can be changed into a playlist package using the PATLITE Playlist Editor 2. |
| PATLITE Playlist Editor | | |

**Caution**

- FV-Win or the PATLITE Playlist Editor can only be used with certain models, but the PATLITE Playlist Editor 2 will work with all PATLITE products.

**Please**

- It is recommended to use Model SDV-2GP (sold separately). Proper operation is not guaranteed with other SD Cards.
- When inserting the SD Card into the slot, be sure to insert it in the proper direction and do not forcibly insert the card. Failure to comply will result in damage to the SD Card and/or product.
- Avoid the intrusion of any foreign substances from entering the card slot.
- While rewriting the messages, do not disconnect power or remove the SD Card.

**Note**

- If the SD Card was inserted during message playback, the rewriting procedure will commence soon after the message completes its playback.
- During the message rewrite, any signal inputs on the Audio Input line will be ignored.



Courtesy of Steven Engineering, Inc. - (800) 258-9200 - sales@steveneng.com - www.stevenengineering.com

Model BSV

Model BDV

Model BKV

Model LKEH

Model RFV

Model FV-127JP

## STEP 1 Get the Playlist Editor

The Playlist Editor is still free from PATLITE.
Contact us by E-mail, which can be located on the back of this catalog.

## STEP 2 Get the Recommended SD Card (Model SDV-2GP)

The SDV-2GP is an SD Card approved and supplied by PATLITE.
(The PATLITE Corporation is a member of the SD Card Association.)

## STEP 3 Create the MP3 messages

Convert any message into MP3 data.
(Remove "ID3" tags and be sure the sample rate is the standard rate of 64b/sec for PATLITE products and the SD Card is formatted for "FAT16".)

## STEP 4 Save the MP3 messages on the SD Card

The Model BSV allows two methods for programming with MP3 Data.
(Refer to the product manual for detailed information)

## STEP 5 Load the MP3 Data into the Product

Programming can be done right out in the field!
Push the SD Card into the Product's SD Card slot and listen for the Beep that tells its programming (Refer to the product manual for detailed information on programming).



Courtesy of Steven Engineering, Inc. - (800) 258-9200 - sales@steveneng.com - www.stevenengineering.com

## PATLITE Playlist Editor

**Create any Playlist using Playlist Editor**

**With PATLITE's downloadable Playlist Editor from the Web, and Windows XP and Vista OS software;**

### Playlist Editor Overview

1. Decide on the sounds and messages for Channels and Phrases
2. Start the Software.

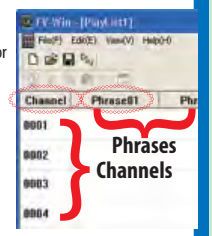


1. Insert the sound or message files into appropriate channels and phrases
2. Save as "playlist.slp" after all files are installed
3. The playlist creation is completed.

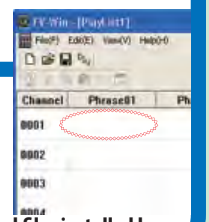


**Sound files installed here**

## Example (BKV, LKEH)

1. Open the front cover. (Refer to the product manual for more details)
2. After inserting the SD Card with the stored data into the slot, a high-low beep will sound to indicate rewriting has begun.
3. When a short beep sound is heard, it indicates the rewriting sequence is complete and the SD Card can be removed from the slot.
   * Rewriting should be completed within 60 seconds. The rewriting is not successfully completed if beeping sounds other than indicated above are heard, or when there is no response (Refer to the product manual for more details). In addition, if the volume has been minimized, the beeping sounds cannot be heard.
4. Playback the channels to verify the rewriting has been successful. (Refer to the product manual for more details)

### Please

- It is recommended to use Model SDV-2GP (sold separately). Using other SD Cards is not guaranteed for proper operation.
- Use "FAT16" when formatting the SD Card.
- When inserting the SD Card into the slot, be sure to insert it in the proper direction and do not forcibly insert the card. Failure to comply will result in damage to the SD Card and/or product.
- Avoid the intrusion of any foreign substances from entering the card slot.
- While rewriting the messages, do not disconnect power or remove the SD Card.

### Note

- If the SD Card was inserted during message playback, the rewriting procedure will commence soon after the message completes its playback.
- During the message rewrite, any signal inputs on the Audio Input line will be ignored.



Courtesy of Steven Engineering, Inc. - (800) 258-9200 - sales@steveneng.com - www.stevenengineering.com

# BSV

## Voice Annunciator

RoHS

87 dB at 1m

15 Channels (Binary)

63 Seconds

IP54

□75

NPN/PNP
Open-collector

## The unbelievably thin design includes space-saving for equipment.

FEATURES

- Sound reduction is made with just one signal input. (When the sound reduction function is used, the number of playback messages is reduced.)
- Diverse operational modes in combination with commands can be setup for the right application.
- The use of the SD card can allow changing messages while out in the field.
- Protection Rating of IP54 (Only for front panel mount attachment).
- Despite the thin shape, it has a maximum output of 87dB (at 1m).
- It complies with Europe's environment-friendly RoHS Directive.
- Can be used with transistor driven inputs. (Either NPN or PNP)
- A compact design with only a thickness of 19.9mm.
- Two installation choices of panel or wall mount.
- The volume control is accessible from the front.
- Listed by Underwriters Laboratories Inc.
- Conforms to the CE requirements.

## Easy installation from the front.

With only the need to access the front cover, reduction in labor time and maintenance is simpler with easily removing the front cover for installation and volume adjustment, etc.

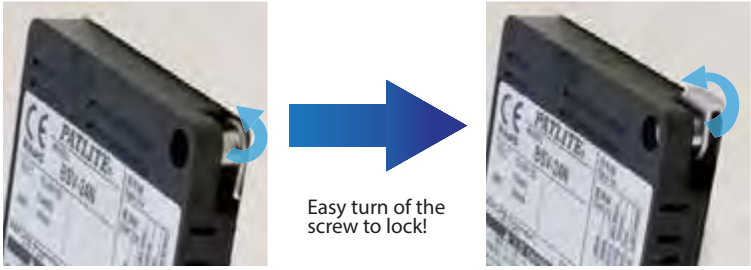


### Options

**PATLITE Playlist Editor 2 (Free Download)**
(OS: Windows® 2000/XP/Vista/Windows 7/Windows 8)

> The new PATLITE Playlist Editor 2 is required to change the audio message data for this product.
> The SD Card does not contain any data.

**SD Card (2 GB) SDV-2GP**

Courtesy of Steven Engineering, Inc. - (800) 258-9200 - sales@steveneng.com - www.stevenengineering.com

## Dimensions

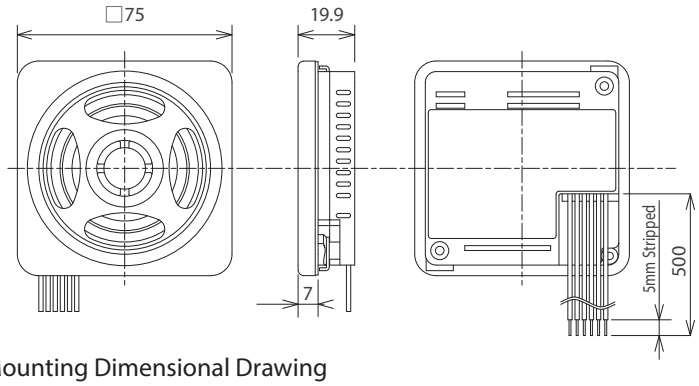


Mounting Dimensional Drawing

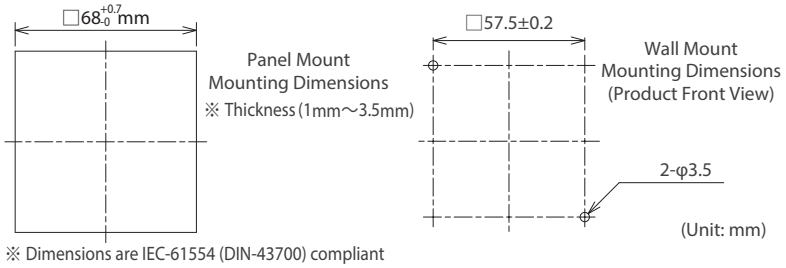


※ Dimensions are IEC-61554 (DIN-43700) compliant

## How to Order

**BSV-24NM-W**

Transistor Type
N: NPN
P: PNP

Pre-recorded Message
None: 15 Built-in Alarms
M : Pre-recorded Messages
(Caution) If the pre-recorded voice message data is overwritten, all of it will be erased.
Also, message data cannot be exported.

Front Cover Color
W: Off-white
D: Dark Gray
S: Silver

Actual Size

☐ Panel Mount

☐ Wall Mount

With the built-in SD card slot, MP3 data rewriting can be done with an SD card.
In addition to the optional message rewriting with the exclusive PATLITE Playlist Editor 2 Application software, Rewriting or editing MP3 data files is possible without the use of dedicated software.

## Wiring

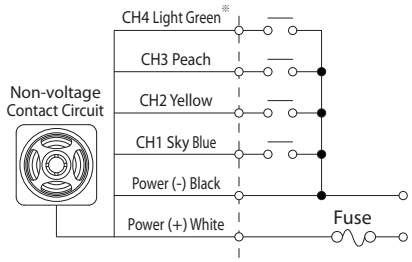


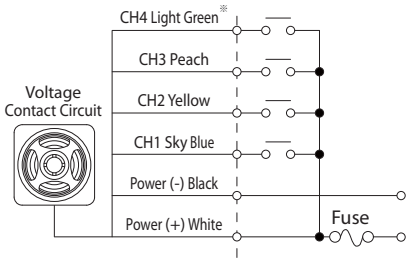


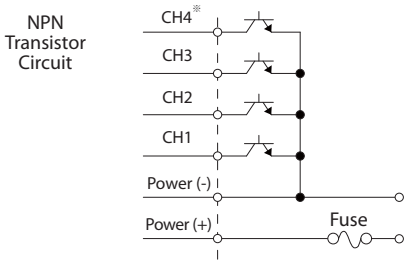


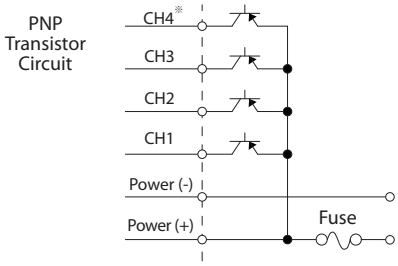


## Specifications

| Transistor Type | Pre-recorded Data | Model | Front Cover Color | Rated Voltage | Operating Voltage Range | Power Consumption | Sound Level (Max.) | Operating Temperature Range | Maximum Playback Time | No. of Playback Inputs | Protection Rating | Mass |
|---|---|---|---|---|---|---|---|---|---|---|---|---|
| NPN | VOICE | BSV- 24NM- W | Off-white | 12-24V DC | 10.8V - 26.4V DC | 3.5W | 87dB (at 1m) | -10 - +50°C (RH less than 85%) | 63 sec. | Bit: 4 Binary: 15 | IP54 (Flush-mount, Upright Position) | 100g |
| | | BSV- 24NM- D | Dark Gray | | | | | | | | | |
| | | BSV- 24NM- S | Silver | | | | | | | | | |
| | ALARM | BSV- 24N- W | Off-white | | | | | | | | | |
| | | BSV- 24N- D | Dark Gray | | | | | | | | | |
| | | BSV- 24N- S | Silver | | | | | | | | | |
| PNP | VOICE | BSV- 24PM- W | Off-white | | | | | | | | | |
| | | BSV- 24PM- D | Dark Gray | | | | | | | | | |
| | | BSV- 24PM- S | Silver | | | | | | | | | |
| | ALARM | BSV- 24P- W | Off-white | | | | | | | | | |
| | | BSV- 24P- D | Dark Gray | | | | | | | | | |
| | | BSV- 24P- S | Silver | | | | | | | | | |

*Actual sound level will depend on sound type and surrounding operating conditions.

Courtesy of Steven Engineering, Inc. - (800) 258-9200 - sales@steveneng.com - www.stevenengineering.com

# BDV

## Voice Annunciator

RoHS CE BDV-15JF Only

- 87 dB at 1m
- 15 Channels (Binary)
- 63 Seconds
- IP54 (Upright Only)
- □80
- NPN Open-collector

## Excellent sound quality with MP3 playback! This panel-mounted MP3 voice annunciator uses SD cards*, allowing messages to be changed easily. (*Recommended: SDV-2GP)

FEATURES

- Only Flush-mounting style available.
- Able to produce a loud sound of up to 87 dB (at 1m) despite its compact size
- A volume control on the front panel provides an easy way to adjust the sound volume.
- The use of an SD card allows message changes without uninstalling the device.
- Environmentally friendly since the unit complies with the EU RoHS Directives.
- Several playback modes are available for various applications.
- Includes binary input as a standard option for selecting up to 15 messages.
- Supports input selection using NPN open-collector transistor.
- The unit complies with EU Directives and includes the CE mark (BDV-15JF only)
- Two colors are available for selecting the best color match for the installation.
- Protection rating: IP54 (only the front panel when flush-mounted)

## How to Order

**BDV-15JF-J**

Rated Voltage
J: DC 12-24V
K: AC 100V/220V

Color
J: Ivory White
K: Dark Gray

## Dimensions

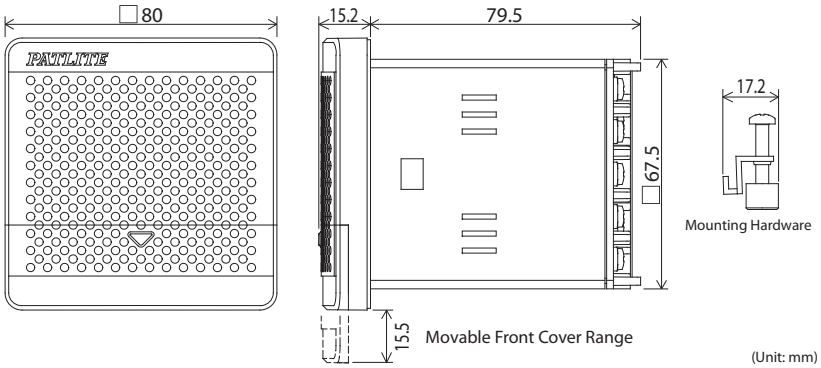




Courtesy of Steven Engineering, Inc. - (800) 258-9200 - sales@steveneng.com - www.stevenengineering.com

# Wiring Diagram

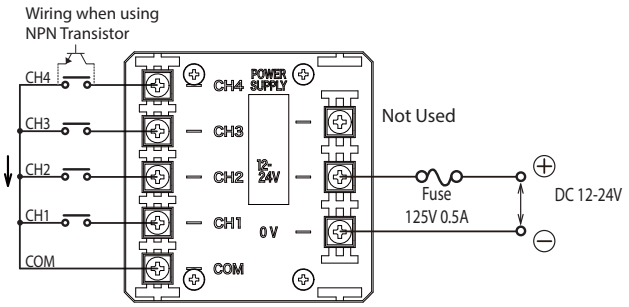


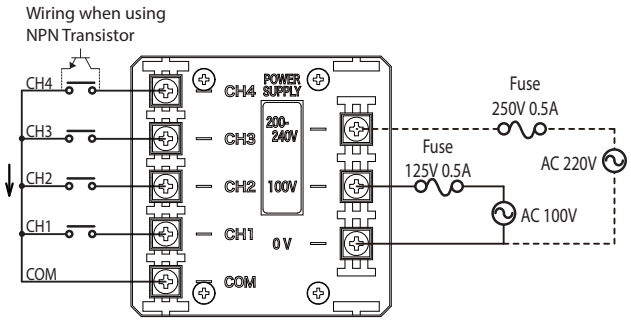


# Playback Modes

## Mode Selector Switch

**Several playback modes for a combination of applications.**

| | | |
|---|---|---|
| A | Bit Input Mode | Plays back up to 4 messages using Channels 1 to 4. |
| B | Binary Input Mode | Plays back up to 15 messages using Channels 1 to 4. |
| C | Bit Input/ Volume Reduction Mode | Plays back up to 3 messages using Channels 1 to 3. When Channel 4 receives an input, the volume is reduced by about -10dB. |
| D | Binary Input/ Volume Reduction Mode | Plays back up to 7 messages using Channels 1 to 3. When Channel 4 receives an input, the volume is reduced by about -10dB. |
| E | Bit Input/ Priority Message Playback Mode | Plays back up to 7 messages using Channels 1 to 3. If a message input occurs during playback of another message, the message will stop and allow the input message to play back. |
| F | Binary Input/ Priority Message Playback Mode | Plays back up to 15 messages using Channels 1 to 4. If a message input occurs during playback of another message, the message will stop and allow the input message to play back. |
| G | Bit Input/ Hold Message Playback Mode | Plays back up to 4 messages using Channels 1 to 4. As long as the input is held on, the message is played back, once the input is removed, the message playback stops. |
| H | Binary Input/ Hold Message Playback Mode | Plays back up to 15 messages using Channels 1 to 4. As long as the input is held on, the message is played back, once the input is removed, the message playback stops. |
| I - P | Test Playback Mode | Plays back Message No. 1 |

## Up to 87dB (at 1m)

Despite its slim appearance, it is able to produce a maximum of 87dB (at 1m).
(Actual sound level will depend on sound type and surrounding operating conditions.)

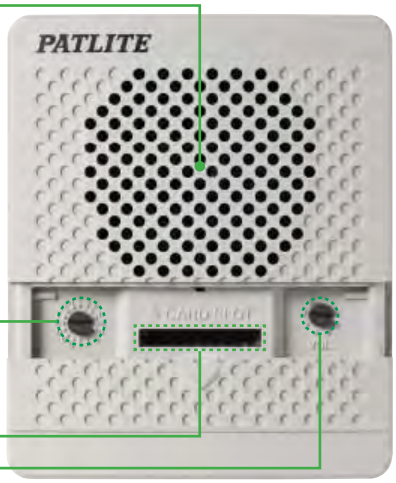


## Volume Control

The volume is easily accessable from the front for adjustment.

## Memory Card Slot

With an SD Card, messages can be changed while the unit is still mounted.

## Options

**PATLITE Playlist Editor 2 (Free Download)**
(OS: Windows® 2000/XP/Vista/Windows 7/Windows 8)

> The new PATLITE Playlist Editor 2 is required to change the audio message data for this product.

> The SD Card does not contain any data.

**SD Card (2 GB) SDV-2GP**

# Specifications

| Model | Rated Voltage | Operating Voltage Range | Power Consumption | Sound Level (Max.) | Voice File | Operating Temperature Range | Maximum Playback Time | No. of Playback Inputs | Protection Rating | Mass |
|---|---|---|---|---|---|---|---|---|---|---|
| BDV-15JF | DC 12-24V | DC 10.8V - 26.4V | 4W | 87dB* (at 1m) | MPEG- Audio Layer (MP3) Standard Bit Rate: 64kb/s Fs=44.1kHz | -10 - +50°C (RH less than 85%) | 63 sec. | Bit: 4 Binary: 15 | IP54 (Flush-mount) | 220g |
| BDV-15KF | AC 100/220V | AC 100V ±10% AC 220V±10% | 5W | | | | | | | 340g |

*Actual sound level will depend on sound type and surrounding operating conditions.

Courtesy of Steven Engineering, Inc. - (800) 258-9200 - sales@steveneng.com - www.stevenengineering.com

# BKV

## Voice Annunciator

RoHS CE BDV-15JF Only

SOUND VOICE MP3

**95** dB at 1m

**31** Channels (Binary)

**63** Seconds

**IP54** (Upright Only)

**□120**

NPN Open-collector

# Excellent sound quality with MP3 playback! This panel-mounted MP3 voice annunciator uses SD cards,* allowing messages to be changed easily. (*Recommended: SDV-2GP)

FEATURES·

- Only Flush-mounting style available.
- Able to produce a loud sound of up to 87 dB (at 1m) despite its compact size
- A volume control on the front panel provides an easy way to adjust the sound volume.
- The use of an SD card allows message changes without uninstalling the device.
- Environmentally friendly since the unit complies with the EU RoHS Directives.
- Several playback modes are available for various applications.
- Includes binary input as a standard option for selecting up to 15 messages.
- Supports input selection using NPN open-collector transistor.
- The unit complies with EU Directives and includes the CE mark (BKV-15JF only)
- Two colors are available for selecting the best color match for the installation.
- Protection rating: IP54 (only the front panel when flush-mounted)

## How to Order

**BKV-31JF-J**

Model

Rated Voltage
J: DC 12-24V
K: AC 100V
Q: AC 220V

Color
J: Light Gray
K: Dark Gray

## Dimensions

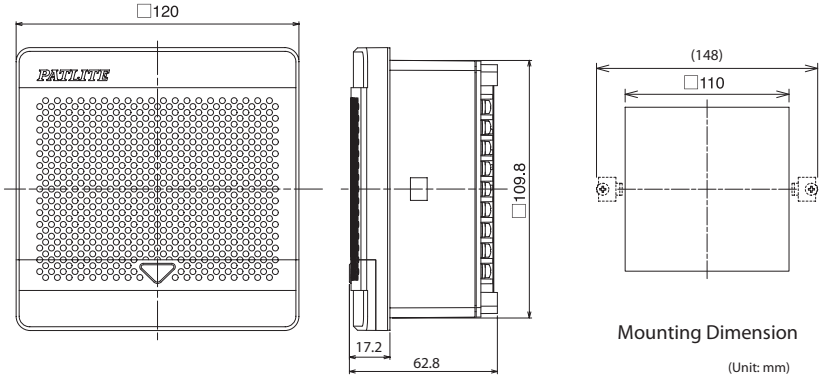


Mounting Dimension

(Unit: mm)



Courtesy of Steven Engineering, Inc. - (800) 258-9200 - sales@steveneng.com - www.stevenengineering.com

# Playback Modes

## Mode Selector Switch

**Several playback modes for a combination of applications.**

| | | |
|---|---|---|
| A | Bit Input Mode | Plays back up to 5 messages using Channels 1 to 5. |
| B | Binary Input Mode | Plays back up to 31 messages using Channels 1 to 5. |
| C | Bit Input/ Volume Reduction Mode | Plays back up to 4 messages using Channels 1 to 4. When Channel 5 receives an input, the volume is reduced by about -15dB. |
| D | Binary Input/ Volume Reduction Mode | Plays back up to 15 messages using Channels 1 to 4. When Channel 5 receives an input, the volume is reduced by about -15dB. |
| E | Bit Input/ Priority Message Playback Mode | Plays back up to 5 messages using Channels 1 to 5. If a message input occurs during playback of another message, the message will stop and allow the input message to play back. |
| F | Binary Input/ Priority Message Playback Mode | Plays back up to 31 messages using Channels 1 to 5. If a message input occurs during playback of another message, the message will stop and allow the input message to play back. |
| G | Bit Input/ Hold Message Playback Mode | Plays back up to 5 messages using Channels 1 to 5. As long as the input is held on, the message is played back, once the input is removed, the message playback stops. |
| H | Binary Input/ Hold Message Playback Mode | Plays back up to 31 messages using Channels 1 to 5. As long as the input is held on, the message is played back, once the input is removed, the message playback stops. |
| I - P | Test Playback Mode | Plays back Message No. 1 |

## Up to 95dB (at 1m)

Despite its slim appearance, it is able to produce a maximum of 87dB (at 1m).
(Actual sound level will depend on sound type and surrounding operating conditions.)

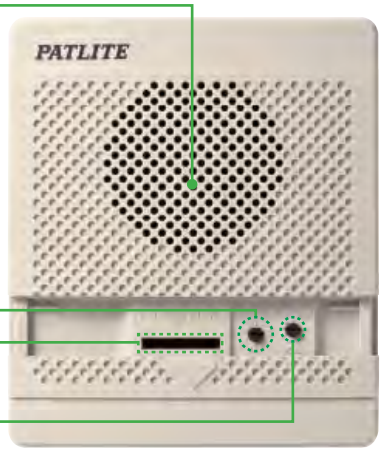


## Volume Control

The volume is easily accessable from the front for adjustment.

## Memory Card Slot

With an SD Card, messages can be changed while the unit is still mounted.

## Optional Bracket (BK-001)

This bracket is used to install the annunciator in a place where holes have already been drilled for conventional PATLITE Product (φ133mm Type)

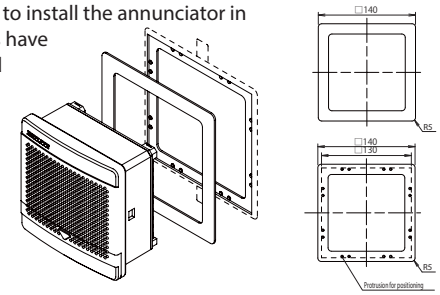


## Options

**PATLITE Playlist Editor 2 (Free Download)**
(OS: Windows® 2000/XP/Vista/Windows 7/Windows 8)
> The new PATLITE Playlist Editor 2 is required to change the audio message data for this product.
> The SD Card does not contain any data.

**SD Card (2 GB) SDV-2GP**

# Wiring

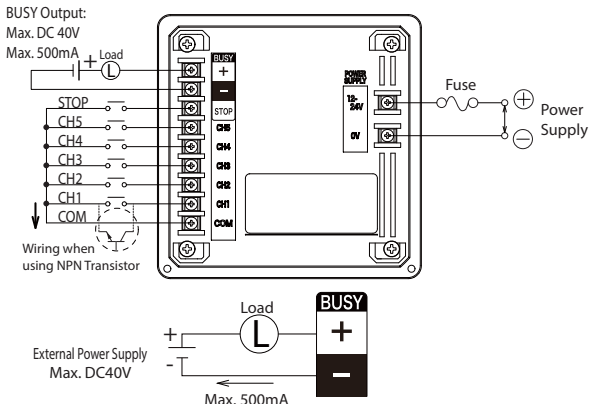


# Specifications

| Model | Rated Voltage | Operating Voltage Range | Power Consumption | Sound Level (Max.) | Voice File | Operating Temperature Range | Maximum Playback Time | No. of Playback Inputs | Protection Rating | Mass |
|---|---|---|---|---|---|---|---|---|---|---|
| BKV-31JF | DC 12-24V | DC 10.8V - 26.4V | 9W | 95dB (at 1m) | MPEG- Audio Layer (MP3) Standard Bit Rate: 64kb/s Fs=44.1kHz | -10 - +50°C (RH less than 85%) | 63 sec. | Bit: 5 Binary: 31 | IP54 (Flush-mount) | 350g |
| BDV-31KF | AC 100V | AC 100V ±10% | 10W | | | | | | | 530g |
| BDV-15KF | AC 220V | AC 220V ±10% | | | | | | | | |

*Actual sound level will depend on sound type and surrounding operating conditions.



Courtesy of Steven Engineering, Inc. - (800) 258-9200 - sales@steveneng.com - www.stevenengineering.com

# FV-127JP

## MP3 File Playback Circuit Board

RoHS

**127** Channels (Binary)

**8** Minutes

**24VDC**

NPN/PNP Open-collector

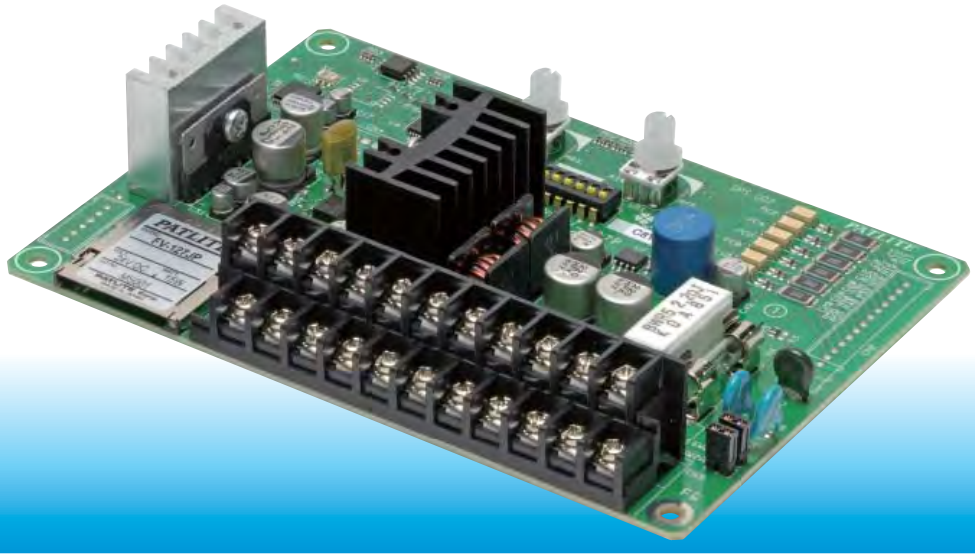

## Audio messages can be registered up to 127 channels, ideal for various equipment or facility purpose where the audio message assistance is required.

FEATURES

- High quality sound and long playback time.
- MP3 compressed audio file format enables long playback time and high quality sound.
- Approximately eight minutes worth of audio messages can be stored in the onboard memory.
- Capable of 240 minutes of message playback when using an SD card as external memory. (MP3 data at standard 64kbit/s rate and 128Mb SD Card)
- Audio messages can be overwritten and reprogrammed with the Playlist Editor 2 (free download) and optional SD Card.
- Data stored in the onboard memory can be extracted to the SD Card.
- 3 sound reduction levels of -10dB, -20dB and -30dB (at 1m) can be controlled by an external signal.
- Five different playback modes are available

NOISE REDUCTION FEATURES

- Input delay can be selected (10ms or 50ms) to reduce noise
- Extending the delay to input a signal reduces noise
- Another noise countermeasure can include setting jumper pins

OTHER FEATURES

- Terminal block to provide safe and secure wire connections.
- Selectable speaker output (2W or 4W), AUX and BUSY Output terminals.
- Operating voltage range is from 19V to 29V DC (Rated Voltage: 24V DC)
- This product is compliant with the RoHS directive (DIRECTIVE 2002/95/EC)

## How to Order

**FV-127JP**

Model

Message
127: 127 Channels

Rated Voltage
J: DC 24V

Body Type
P: Circuit Board Only

### Options

**PATLITE Playlist Editor 2 (Free Download)**
(OS: Windows® 2000/XP/Vista/Windows 7/Windows 8)
> The new PATLITE Playlist Editor 2 is required to change the audio message data for this product.
> The SD Card does not contain any data.

**SD Card (2 GB) SDV-2GP**

Courtesy of Steven Engineering, Inc. - (800) 258-9200 - sales@steveneng.com - www.stevenengineering.com

## Dimensions

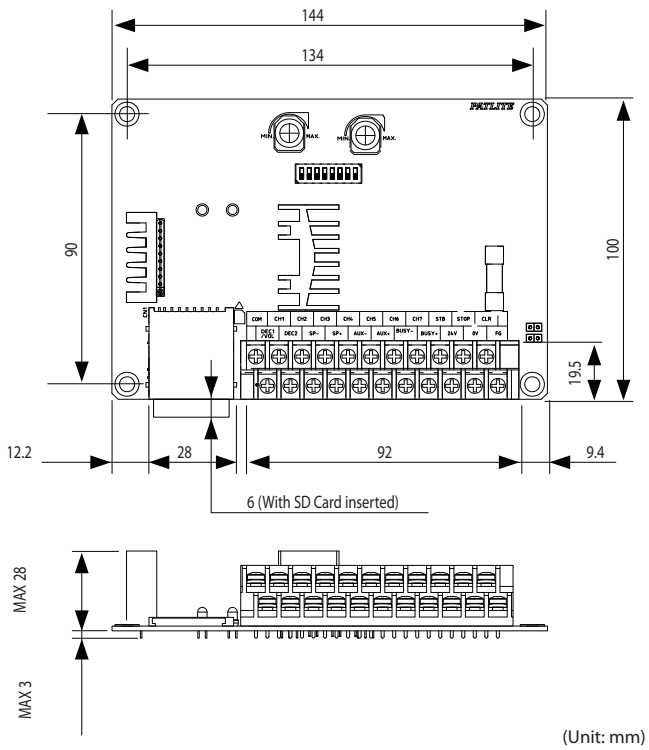


## Playback Modes

| | |
|---|---|
| Normal Playback | Designated audio message is played back by distinctive signal input. Audio message is played back once in case of one shot input, and audio message is repeated when the signal is input continuously. |
| Memory Playback | Up to 23 audio message inputs can be memorized in order of input. After one playback is finished, the next memorized audio message will be played back. The inputs exceeding the limit will not be memorized. |
| Latest Input and Greater Channel Priority Playback | When the signal for a greater channel number is input during the message playback, the audio message being played back will be stopped, and previous audio message input will be played back. When the signal for the same or smaller channel number is input, the signal will not be accepted. |
| Momentary Playback | Audio message is played back only while the signal input is maintained. Playback will be stopped when the signal input is stopped. |
| Latest Input Priority Playback | When the signal is input during the message playback, the audio message being played back will be stopped, and the previous audio message input will be played back. |

## Specifications

| General Specifications | |
|---|---|
| Model Name | FV-127JP |
| Rated Voltage | DC 24V |
| Operating Voltage Range | DC 19 to 29V |
| Wiring Method | M3 Terminal Bus |
| Power Consumption | Maximum 15W (1*) |
| Operating Temperature Range | -10 to 50°C |
| Storage Temperature | -40 to 80°C |
| Relative Humidity | 85% RH or less |
| Operating Environment | Built-in Type Only |
| Installation Method | 4 Screw Tie-down |
| Vibration Resistance | 45m/s2 (30Hz forward and back/Left and right for 2hrs., up and down for 4hrs.) |
| Mass | 160g ±10% |
| Outer Dimensions | 144×100×28 [mm] (Lead Wires and Mounting Posts not included) |
| **Audible Specifications** | |
| Replay Message Number | For Binary: 127 For Bit Input: 7 |
| Audio File Format | MPEG1-Audio Layer: (MP3) |
| Bit Rate | 32kbit/s; 64kbit/s(Standard); 128kbit/s Fs=44.1kHz |
| Maximum PlaybackTime | On-board Memory (4MB): About 8 min (Recorded with standard bit rate)<br>External Memory (SD Card): With 128MB about 240 min. (Standard Bit Rate Recording) |
| On-board Memory Size | 4,360,191byte |
| Audio Start-up Time | About 260ms (When sound mute not added at beginning and end of messages) |
| Audio Pause Time | Unless specified, 100ms sound mute added at beginning and end of messages |
| Compatable Memory Card | SD Card Recommended Part No.: SDV-2GP (Sold Separate) |
| Card Format | FAT16 |
| Audio Rewrite Capability | Use with Patlite Playlist Editor 2 (Free Download) and an SD Card |
| Audio Rewrite Time | About 180 sec. (When changing the 4MB on-board memory) |
| **Input / Output Specifications** | |
| Signal Input Section | CH1 , CH2 , CH3 , CH4 , CH5 , CH6 , CH7 , STB , CLR , STOP, DEC1/VOL, DEC2 |
| Signal Input Priority | CLR Input > STOP Input > CH Input (Larger Channel takes Priority) |
| Sound Reduction Input | Speaker/AUX Output: Three Sound Reduction Levels of -10dB, -20dB, -30dB (1*) |
| Input Hold Time | More than 10ms or 50ms (Changeable Settings) |
| Signal Input Type | Non-voltage contact or NPN Open Collector |
| Speaker Output | 8Ω compatable speaker of 4W or more,<br>or 8Ω compatable speaker of 2W or more (Switchable Setting) |
| Maximum SoundPressure | Speaker Output at 4W: 105 dB; at 2W: 102dB (2*) |
| AUX Output | 0dBV 600Ω (Adjustable with Volume Control or Sound Reduction Input) |
| BUSY Output | Maximum DC40V, 500mA |

(1*) 1kHz Sine Wave Data Playback at -6dB

(2*) At 1m with 1kHz Sine Wave Data Playback and SPW-5E Speaker (Sold Separate)

This product complies with the RoHS directive (DIRECTIVE 2002/95/EC)

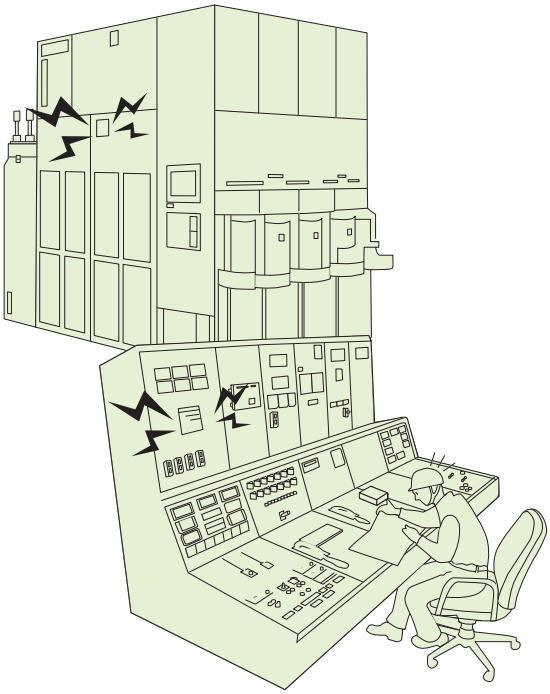



Courtesy of Steven Engineering, Inc. - (800) 258-9200 - sales@steveneng.com - www.stevenengineering.com

MEMO

For more details, visit our website at http://www.patlite.com



Courtesy of Steven Engineering, Inc. - (800) 258-9200 - sales@steveneng.com - www.stevenengineering.com

# Hybrid Products

Courtesy of Steven Engineering, Inc. - (800) 258-9200 - sales@steveneng.com - www.stevenengineering.com

# LKEH

## MP3 Voice Annunciator & LED Signal Tower

RoHS CE

LED

32 Alarm Sounds

105dB at 1m

IP53

(LED) Φ100

NPN Open-collector

# Get the attention you need with the PATLITE field-programmable LKEH Series Hybrid Signal Tower with audible alarm.

FEATURES

- The pre-recorded type offers 32 sounds in one unit with 8 bit input and 32 binary input channel capability.
- The message capacity for the LKEH-FV is 63 seconds (64kbit/s) with 5 bit input and 31 binary input channel capability.
- The LKEH-FV is field-programmable with an SD Card (sold separately).
- Visible from great distance with ultra-bright LEDs and 100 diameter lens.
- A 2G vibration resistant design allows safe use in a high-vibration environment.
- One common wire makes it easy to control both the audio and LED inputs.
- Volume is adjustable from 0 to 105dB (at 1m) to fit various environments.
- Compliance with the RoHS Directives makes it environmentally friendly.
- Complies with EU directives and includes the CE mark (for 24V type).

AVAILABLE BY SPECIAL ORDER

- PNP open collector transistor type.
- AC 120V type
- UL Listed (File No. E215660, for 24V type only).

## How to Order

**LKEH-402FVUL-RYGB**

Model

Tiers
1 - 4

Rated Voltage
02: DC 24V
10: AC 100V
20: AC 220V

Sound Type
FV: Voice Synthesizer
FA: Type A
FC: Type C
FD: Type D
FE: Type E

UL Conformity
None: No Conformity
UL: UL Standard

Color
R: Red
Y: Amber
G: Green
B: Blue
C: Clear/White
(Top to bottom)

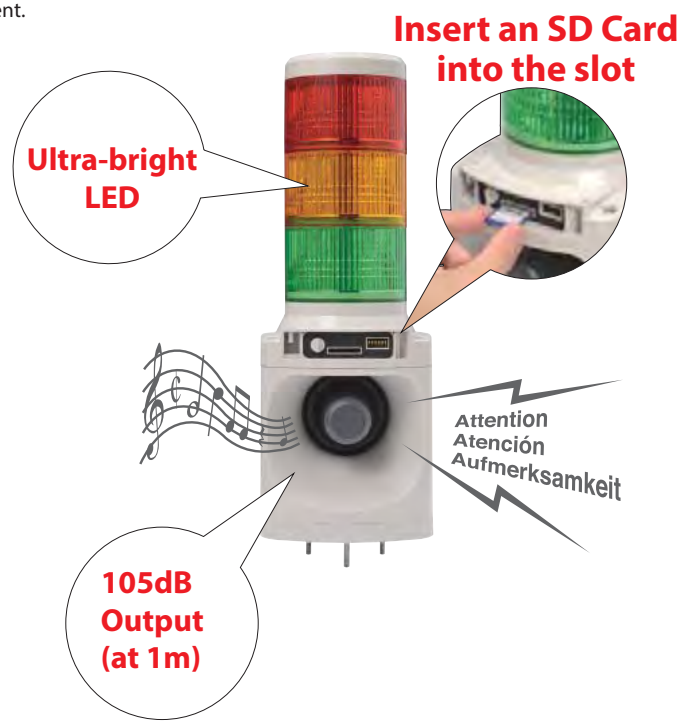


**Use of Copyrighted Material**

PATLITE Corporation has not applied for permission to use certain copyrighted music or songs recorded for Type-A, Type-C and Type-D melody charts outside of Japan. Therefore, please contact the local copyright association for permission before using the product in case this product is used outside of Japan. melody chart Type-E is recommended for use outside of Japan as this playlist does not include copyrighted music or songs, and permission is not required.



Courtesy of Steven Engineering, Inc. - (800) 258-9200 - sales@steveneng.com - www.stevenengineering.com

# Wiring

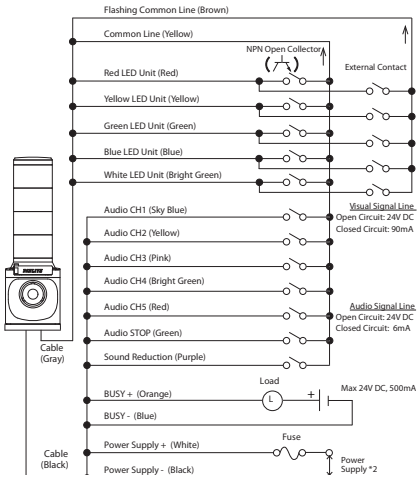


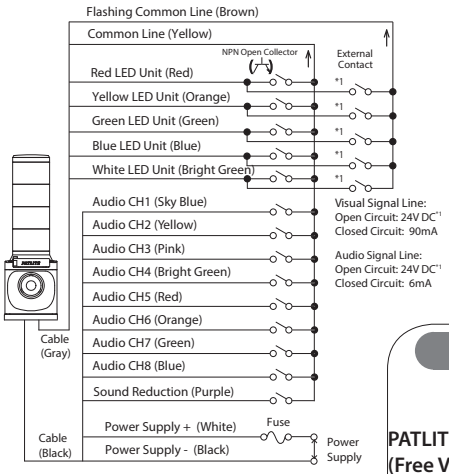


# Options

**Wall-mount Bracket SZ-023**
Bracket Material:Steel
Cover Material: ABS Resin

## Options

**PATLITE Playlist Editor 2 (Free Version)**
(OS: Windows® 2000/XP/Vista)

> The new PATLITE Playlist Editor 2 is required to change the audio message data for this product.

> The SD Card does not contain the Playlist Editor software or any audio messages.

**SD Card (2 GB) SDV-2GP**

# Sound Charts

| Type A | | | (Japan Only) |
|---|---|---|---|
| Beep (slow intermittent) | Stutter (rapid intermittent) | Bell (clear high-pitch) | Yelp (rapid siren) |
| Rapid Hi-Lo | Melody Chime | Synthesized Piano | Synthesized Bell |
| Stutter + Bell | Synthesized Melody Chime | Chime | Call Sign |
| Fur Elise | Maiden's Prayer | Bach Minuet in Gmaj | Annie Laurie |
| London Bridge is falling down | Hol-di-ri-Dia | Mary had a little Lamb | Camptown Races |
| Cuckoo Song | Village Blacksmith | On the Bridge of Avignon | Daydream Believer |
| Amaryllis | Mozart Symphony No. 40 | Quiet Lakeside | Ich bin ein Musikante |
| Spanish Romance | Katyusha | Grandfather's Clock | Ave Maria |

| Type D | | | (Japan Only) |
|---|---|---|---|
| Beep (slow intermittent) | Stutter (rapid intermittent) | Bell (clear high-pitch) | Yelp (rapid siren) |
| Rapid Hi-Lo | Melody Chime | Synthesized Piano | Synthesized Bell |
| Runner | Mamotte Agetai | Chime | Call Sign |
| Iribiao Kikinagara | September | Doyoubino Koibito | Akino Kehai |
| Saafu Tengoku Sukii Tengoku | Iro White-blend | Happy Birthday | Hi Ho |
| I've been working on the Railroad | The Bear Song | Toys Go "Cha-cha-cha" | Konnako Irukana |
| Schubert's Lullaby | Rudolph the red-nosed Reindeer | She Wore a Yellow Ribbon | My Darling, Clementine |
| Yellow Rose of Texas | Yankee Doodle | When the Saints Go Marching In | Londonderry Air |

| Type C | | | (Japan Only) |
|---|---|---|---|
| Beep (slow intermittent) | Stutter (rapid intermittent) | Bell (clear high-pitch) | Yelp (rapid siren) |
| Rapid Hi-Lo | Melody Chime | Synthesized Piano | Synthesized Bell |
| Stutter + Bell | Synthesized Melody Chime | Chime | Call Sign |
| Can't take my eyes off of you | Top of the World | The Entertainer | Amazing Grace |
| Amairono Kamino Otome | Les Champs-Elysees | Canon | Rara Sunshine |
| Uchuusenkan Yamamoto | Oshiete | Makenaide | Gonna Fly Now (Theme from "Rocky") |
| I don't Wanna Miss a Thing | Yozorano Mukou | Aiwa Katsu | Haruyo Koi |
| Gattsudaze | Odoru Ponpokorin | Imasugu Kisu Mi | Truth |

| Type E | | | (Worldwide) |
|---|---|---|---|
| Beep (slow intermittent) | Stutter + Bell | Inverted Reveille | Annie Laurie |
| Stutter (rapid intermittent) | Melody Chime | Galactic Motor | London Bridge is falling down |
| Bell (clear high-pitch) | Chime | Ringing Phone | Mary had a little Lamb |
| Yelp (rapid siren) | Call Sign | Two Tone | Camptown Races |
| Rapid Hi-Lo | Train Ride | Alarm Clock | Amaryllis |
| Melody Chime | Galloping Hi-Lo | Ringing Hi-Lo | Mozart Symphony No. 40 |
| Synthesized Piano | Alien Chatter | Fur Elise | Ave Maria |
| Synthesized Bell | Falling Crystals | Bach Minuet in Gmaj | Grandfather's Clock |

# Specifications

| Model | Rated Voltage | Operating Voltage Range | Number of Tiers | Power Consumption | Mass |
|---|---|---|---|---|---|
| LKEH- 102F | DC 24V | DC 24V ±10% | 1 | 10.6W | 1.4kg |
| LKEH- 202F | | | 2 | 12.4W | 1.6kg |
| LKEH- 302F | | | 3 | 14.2W | 1.8kg |
| LKEH- 402F | | | 4 | 16.0W | 2.0kg |
| LKEH- 110F | AC 100V | AC 100V ±10% | 1 | 17.0W | 2.1kg |
| LKEH- 210F | | | 2 | 20.0W | 2.3kg |
| LKEH- 310F | | | 3 | 23.0W | 2.5kg |
| LKEH- 410F | | | 4 | 26.0W | 2.7kg |
| LKEH- 120F | AC 220V | AC 220V ±10% | 1 | 17.0W | 2.1kg |
| LKEH- 220F | | | 2 | 20.0W | 2.3kg |
| LKEH- 320F | | | 3 | 23.0W | 2.5kg |
| LKEH- 420F | | | 4 | 26.0W | 2.7kg |

(Note) The sound pressure level is based on measurements under controlled conditions (voice-synthesized 1 kHz sine wave played back from a distance of 1 meter), therefore the surrounding environmental conditions and message content will result in different values for the sound pressure level.

※) Even when starting two or more units simultaneously, a lag will occur during message playback.

# Dimensions

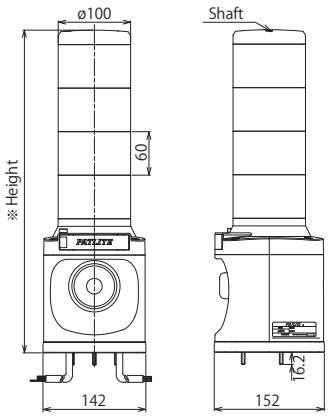


※Height
1 Tier: 265.2
2 Tiers: 325.3
3 Tiers: 385.4
4 Tiers: 445.5

Mounting Dimensions

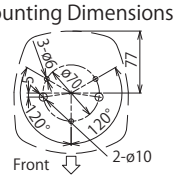


(Unit: mm)

Courtesy of Steven Engineering, Inc. - (800) 258-9200 - sales@steveneng.com - www.stevenengineering.com

# RFT

## Audible Alarm & LED Tower

RoHS CE

LED

90dB at 1m

32 Alarm Sounds

IP54

□115

NPN Open-collector

# An LED Rotating Light with built-in alarm sounds controllable by binary or bit input for a maximum of 32 sounds!

FEATURES

- Sound reduction feature to drop the volume by about 10dB (at 1m) when an input signal is received (Binary Mode only).
- Using an SD Card can allow customization of one sound group to be re-arranged using any of the pre-installed sounds.
- Compliance with the RoHS Directives makes it environmentally friendly.
- Complies with EU directives and includes the CE mark (for 24V type).
- Can be controlled with NPN open-collector transistor inputs.
- A side panel access allows easier volume adjustment.
- Produces a loud sound of up to 90dB (at 1m)

Side access design enables easy post-installation maintenance

## How to Order

**RFT-24A-R**

Rated Voltage
- 24 : DC 24V
- 100: AC 100V
- 220: AC 220V

Sound Type
- A: A Type
- C: C Type
- D: D Type
- E: E Type

Globe Color
- R: Red
- Y: Amber
- G: Green
- B: Blue

The sound reduction function reduces the volume by approx. -10dB (at 1m), a feature ideal for use at night time together with a timer or sensor.

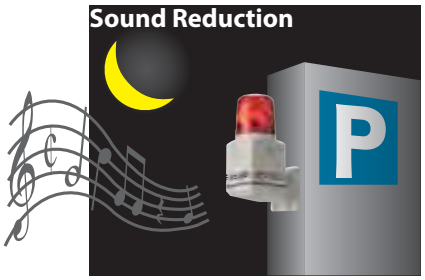


| Type E | | | |
|---|---|---|---|
| Beep (slow intermittent) | Stutter + Bell | Inverted Reveille | Annie Laurie |
| Stutter (rapid intermittent) | Melody Chime | Galactic Motor | London Bridge is falling down |
| Bell (clear high-pitch) | Chime | Ringing Phone | Mary had a little Lamb |
| Yelp (rapid siren) | Call Sign | Two Tone | Camptown Races |
| Rapid Hi-Lo | Train Ride | Alarm Clock | Amaryllis |
| Melody Chime | Galloping Hi-Lo | Ringing Hi-Lo | Mozart Symphony No. 40 |
| Synthesized Piano | Alien Chatter | Fur Elise | Ave Maria |
| Synthesized Bell | Falling Crystals | Bach Minuet in Gmaj | Grandfather's Clock |



Courtesy of Steven Engineering, Inc. - (800) 258-9200 - sales@steveneng.com - www.stevenengineering.com

## Wiring

RFT

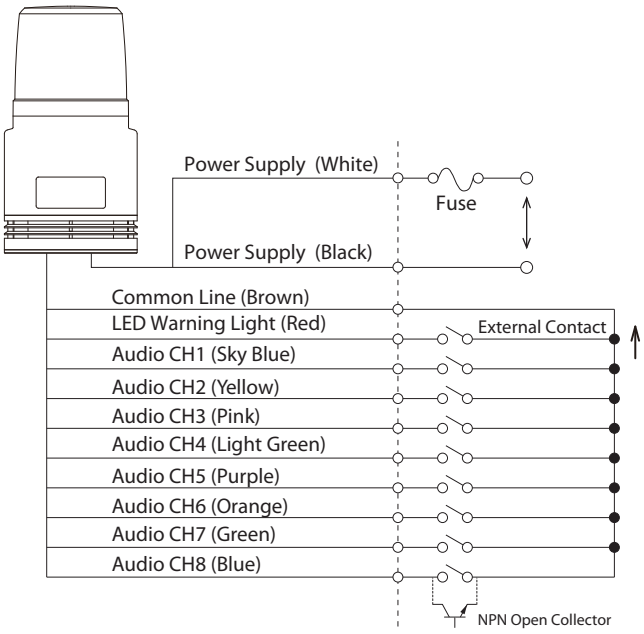


## Options

- RF-001: Wall Mount Bracket

- RF-002 Ceiling Mount Bracket

### Options

**PATLITE Playlist Editor 2 (Free Version)**
(OS: Windows® 2000/XP/Vista)
> The new PATLITE Playlist Editor 2 is required to change the audio message data for this product.
> The SD Card does not contain the Playlist Editor software or any audio messages.

**SD Card (2 GB) SDV-2GP**

## Dimensions

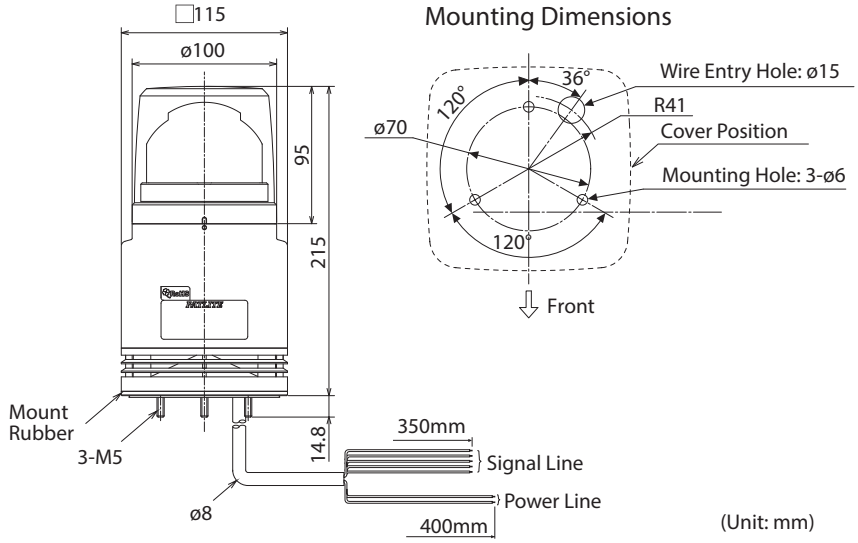


(Unit: mm)

## Specifications

| Series | Model | Rated Voltage | Operating Voltage Range | Maximum Power Consumption | Sound Level | Operating Temperature Range | Flashes per Minute | Protection Rating | Vibration Resistance | Mass |
|---|---|---|---|---|---|---|---|---|---|---|
| RFT | RFT-24 | DC 24V | DC 24V ±10% | 12 W | Max. 90dB (at 1m) | -10°C - +50°C (85%RH or less) | 115 ±15 | IP54 (When Flush-mounted) | 19.6m/s² | 1.0kg |
| | RFT-100 | AC 100V | AC 100V ±10% | 13 W | | | | | | 1.2kg |
| | RFT-220 | AC 220V | AC 220V ±10% | 13 W | | | | | | |

Actual sound level will depend on sound type and operating conditions.
※) Even when starting two or more units simultaneously, a lag will occur during message playback.



Courtesy of Steven Engineering, Inc. - (800) 258-9200 - sales@steveneng.com - www.stevenengineering.com

# RFV

## MP3 Voice Annunciator & LED Signal Tower

LED

15 Channels (Binary)

95dB at 1m

IP54

□115

NPN/PNP Open-collector

# The RFV series is a combination of LED rotating beacon light and MP3 programmable sound unit.

FEATURES

- Field-programmable with an SD Card (sold separately).
- Message capacity of 63 seconds (64kbit/s) with bit input of 4 channels and 15 channels by binary input.
- Volume is adjustable from 0 to 95dB (at 1m) to fit various environments.
- A 4.5G vibration resistant design allows safe use in a high-vibration environment.
- Other Unique Features:

1. Maintenance reduced with long service ultra-bright LEDs that can last over 5 years with 24/7 continuous operation.
2. Highly-visible with a special optical reflector design.
3. Special gear-driven mechanism provides reliability, even after 10 years of no operation.
4. Tight-locking dome stays on, even in high vibration environments.
5. Designed for inverted installation.

AVAILABLE BY SPECIAL ORDER

- PNP open collector transistor type.

Voice message is field programmable with an SD card (sold separately), and the volume can be easily accessed from the side panel, even after installation.

The sound reduction function reduces the volume by approx. -15dB (at 1m), a feature ideal for use at night time together with a timer or sensor.

## How to Order

**RFV-24F-R**

| Rated Voltage | Globe Color |
|---|---|
| 24: 24V DC | R:Red |
| 100: 100V AC | Y: Amber |
| 220: 220V AC | B: Blue |

**Use of Copyrighted Material**

PATLITE Corporation has not applied for permission to use certain copyrighted music or songs recorded for Type-A, Type-C and Type-D melody charts outside of Japan. Therefore, please contact the local copyright association for permission before using the product in case this product is used outside of Japan. melody chart Type-E is recommended for use outside of Japan as this playlist does not include copyrighted music or songs, and permission is not required.



Courtesy of Steven Engineering, Inc. - (800) 258-9200 - sales@steveneng.com - www.stevenengineering.com

## Wiring

RFV

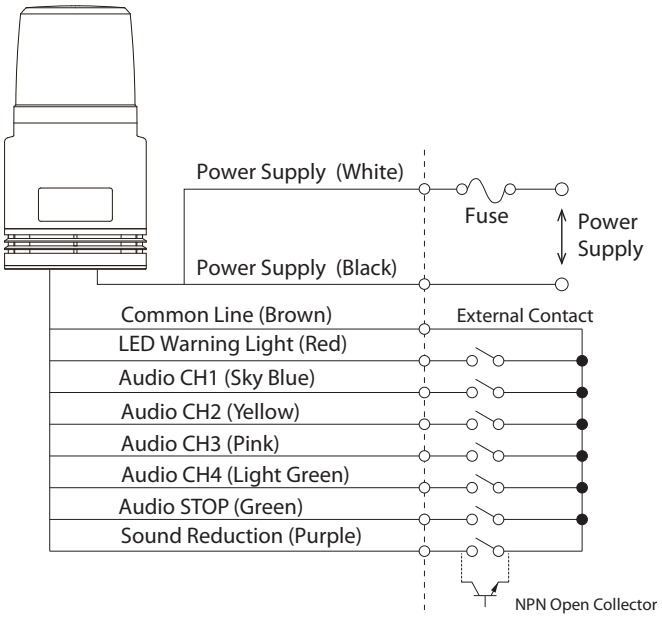


## Options

- RF-001: Wall Mount Bracket

- RF-002 Ceiling Mount Bracket

## Dimensions

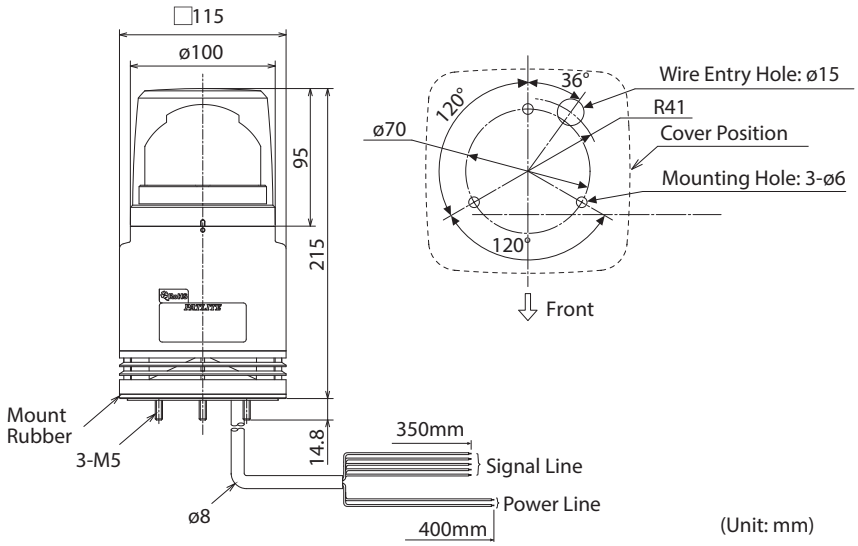


(Unit: mm)

### Options

**PATLITE Playlist Editor 2 (Free Version)**
(OS: Windows® 2000/XP/Vista)
> The new PATLITE Playlist Editor 2 is required to change the audio message data for this product.
> The SD Card does not contain the Playlist Editor software or any audio messages.

**SD Card (2 GB) SDV-2GP**

## Specifications

| Series | Model | Rated Voltage | Operating Voltage Range | Maximum Power Consumption | Sound Level | Operating Temperature Range | Flashes per Minute | Protection Rating | Vibration Resistance | Mass |
|---|---|---|---|---|---|---|---|---|---|---|
| RFV | RFV-24 | DC 24V | DC 24V ±10% | 18 W | Max. 95dB (at 1m) | -10°C - +50°C (85%RH or less) | 115 ±15 | IP54 (When Flush-mounted) | 19.6m/s² | 1.0kg |
| | RFV-100 | AC 100V | AC 100V ±10% | 16W | | | | | | 1.2kg |
| | RFV-220 | AC 220V | AC 220V ±10% | | | | | | | |

Actual sound level will depend on sound type and operating conditions.
※) Even when starting two or more units simultaneously, a lag will occur during message playback.



Courtesy of Steven Engineering, Inc. - (800) 258-9200 - sales@steveneng.com - www.stevenengineering.com

# RT

## Hybrid MP3 & Revolving Light

**Bulb**

**32** Alarm Sounds

**105**dB at 1m

**63** Seconds

**IP23**

NPN Open-collector

# Large horn with revolving warning light featuring clear sound up to 105dB (at 1m).

FEATURES

- Built-in Adjustable alarm with a sound of up to 105dB (at 1m).
- High sound quality with the MP3 voice synthesizer (RT-VF only).
- Installation is in the upright position only.
- Dome is made of superior weather-resistant and light-translucent acrylic resin.
- Available colors are Red, Amber, Green, and Blue.
- Complies with EU directives and includes the CE mark (for 24V type).

AVAILABLE BY SPECIAL ORDER

- Cable: Versatile and flexible 3m cable
- AC 120V type
- IP65 rating
- UL Conformity

**Horn Configuration Concept**

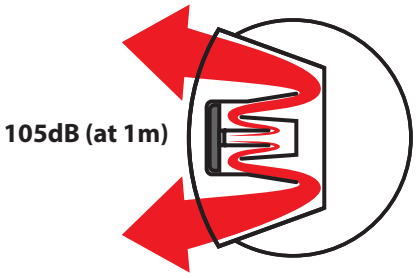


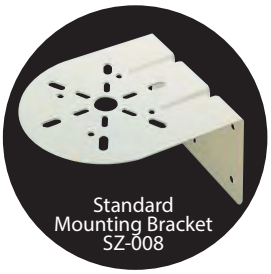


## How to Order

**RT-24VF-R**

Rated Voltage
- 24 : DC 24V
- 100: AC 100V
- 200: AC 200V

Sound
- VF: Voice Synthesizer
- A: Type A
- C: Type C
- D: Type D
- E: Type E

Color
- R: Red
- Y: Amber
- G: Green
- B: Blue

## Dimensions

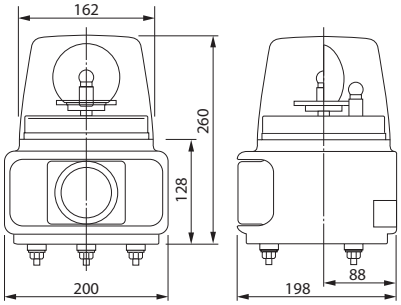


**Mounting Dimensions**

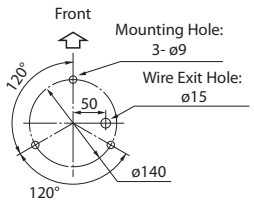


(Unit: mm)



Courtesy of Steven Engineering, Inc. - (800) 258-9200 - sales@steveneng.com - www.stevenengineering.com

# Wiring

## RT-A/C/D/E

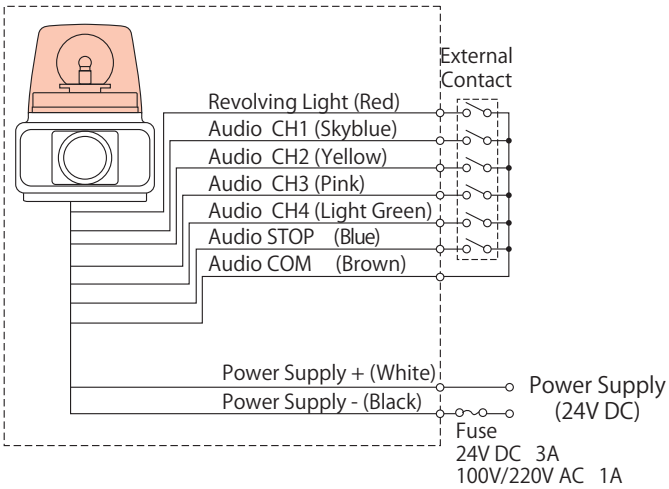


*more than 100ms input is required to activate.

Channel Priority:
4 (Light Green) > 3 (Pink) > 2 (Yellow) > 1 (Skyblue)
The greater number has priority when any of the channels are activated simultaneously.

## RT-FV

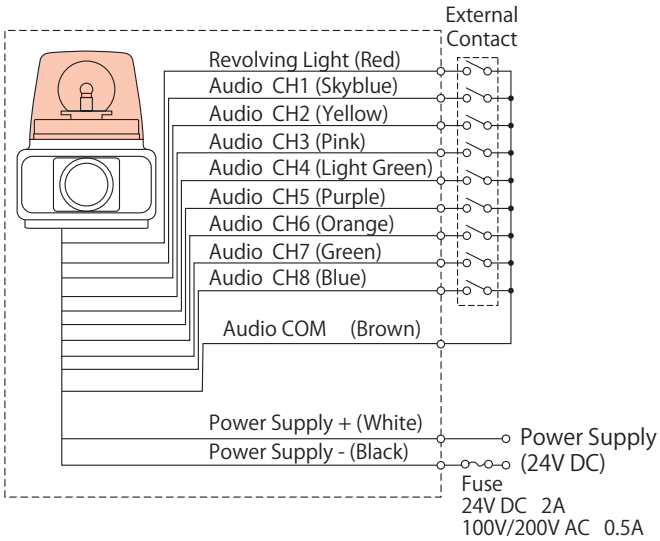


Channel Priority:
8 (Blue) > 7 (Green) > 6 (Orange) > 5 (Red) > 4 (Light Green) > 3 (Pink) > 2 (Yellow) > 1 (Skyblue)
The greater number has priority when any of the channels are activated simultaneously.

# Specifications

| Series | Model | Rated Voltage | Operating Voltage Range | Power Consumption | Bulb Ratings | Bulb Repl. No. | Sound Level | Operating Temperature Range | Rotations per Minute | Sound Level | Channel Input | Mass |
|---|---|---|---|---|---|---|---|---|---|---|---|---|
| Voice | RT-24VF | DC 24V | DC 21 - 27V | 24 W | 24V 20W | 55 | Max. 90dB (at 1m) | -10°C - +50°C (85%RH or less) | 115 | Max. 105dB (at 1m) | Bit: 4 Binary: 15 | 2.0kg |
| | RT-100VF | AC 100V | AC 90 - 100V | 32 W | 12V 15W | 54 | | | 105 | | | 2.4kg |
| | RT-220VF | AC 220V | AC180 - 240V | 30 W | | | | | 95 | | | |
| Sound | RT-24□ | DC 24V | DC 21 - 27V | 24 W | 24V 20W | 55 | Max. 95dB (at 1m) | | 115 | | Bit: 8 Binary: 32 | 2.0kg |
| | RT-100□ | AC 100V | AC 90 - 100V | 32 W | 12V 15W | 54 | | | 105 | | | 2.5kg |
| | RT-220□ | AC 220V | AC180 - 240V | 30 W | | | | | 95 | | | |

Actual sound level will depend on sound type and operating conditions.
※) Even when starting two or more units simultaneously, a lag will occur during message playback.

# Sound Chart

| Type E | | | |
|---|---|---|---|
| Beep (slow intermittent) | Stutter + Bell | Inverted Reveille | Annie Laurie |
| Stutter (rapid intermittent) | Melody Chime | Galactic Motor | London Bridge is falling down |
| Bell (clear high-pitch) | Chime | Ringing Phone | Mary had a little Lamb |
| Yelp (rapid siren) | Call Sign | Two Tone | Camptown Races |
| Rapid Hi-Lo | Train Ride | Alarm Clock | Amaryllis |
| Melody Chime | Galloping Hi-Lo | Ringing Hi-Lo | Mozart Symphony No. 40 |
| Synthesized Piano | Alien Chatter | Fur Elise | Ave Maria |
| Synthesized Bell | Falling Crystals | Bach Minuet in Gmaj | Grandfather's Clock |

**Use of Copyrighted Material**

PATLITE Corporation has not applied for permission to use certain copyrighted music or songs recorded for Type-A, Type-C and Type-D melody charts outside of Japan. Therefore, please contact the local copyright association for permission before using the product in case this product is used outside of Japan. melody chart Type-E is recommended for use outside of Japan as this playlist does not include copyrighted music or songs, and permission is not required.



Courtesy of Steven Engineering, Inc. - (800) 258-9200 - sales@steveneng.com - www.stevenengineering.com

# KJT

## Melody/Alarm & LED Tower

Model DEB LED Lamp
Recommended Product
For more details on Model DEB
Refer to the "Replacement Bulb"
Section at the end of this Catalog

SOUND ALARM

Bulb

8 Channels (Bit)

95dB at 1m

IP23

□116

NPN
Open-collector

# Multi-tiered Revolving Warning Light integrated with voice synthesizer or melody alarm for various applications.

FEATURES

- Eight Channels for Bit Input. (Binary Input: 32)
- Lens is made of superior weather-resistant and light-translucent acrylic resin.
- Built-in adjustable sound of up to 95dB (at 1m) with volume control.
- Warning lights and alarms can be controlled together or separately.
- Available Colors are in Red, Amber, Green, and Blue.
- Installation is available in the upright position only.

## Sound Chart

| Type E | | | |
|---|---|---|---|
| Beep (slow intermittent) | Stutter + Bell | Inverted Reveille | Annie Laurie |
| Stutter (rapid intermittent) | Melody Chime | Galactic Motor | London Bridge is falling down |
| Bell (clear high-pitch) | Chime | Ringing Phone | Mary had a little Lamb |
| Yelp (rapid siren) | Call Sign | Two Tone | Camptown Races |
| Rapid Hi-Lo | Train Ride | Alarm Clock | Amaryllis |
| Melody Chime | Galloping Hi-Lo | Ringing Hi-Lo | Mozart Symphony No. 40 |
| Synthesized Piano | Alien Chatter | Fur Elise | Ave Maria |
| Synthesized Bell | Falling Crystals | Bach Minuet in Gmaj | Grandfather's Clock |

## How to Order

**KJT-302A-RYG**

Model

Tiers
1 - 3

Rated Voltage
02: DC 24V
10: AC 100V
20: AC 200V

Sound Type
A: Type A
C: Type C
D: Type D
E: Type E

Color
R: Red
Y: Amber
G: Green
B: Blue
(Top to bottom)

### Use of Copyrighted Material

PATLITE Corporation has not applied for permission to use certain copyrighted music or songs recorded for Type-A, Type-C and Type-D melody charts outside of Japan. Therefore, please contact the local copyright association for permission before using the product in case this product is used outside of Japan. melody chart Type-E is recommended for use outside of Japan as this playlist does not include copyrighted music or songs, and permission is not required.



Courtesy of Steven Engineering, Inc. - (800) 258-9200 - sales@steveneng.com - www.stevenengineering.com

## Dimensions

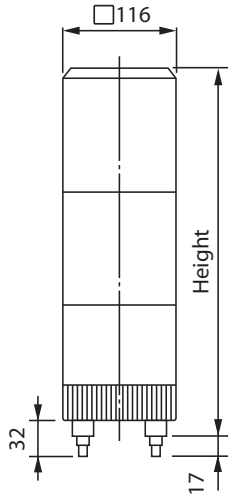


Height (mm)
1 Tier: 232
2 Tiers: 337
3 Tiers: 442

Mounting Dimensions

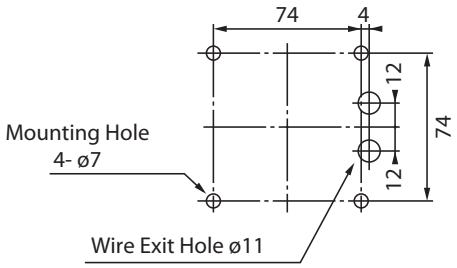


(Unit: mm)

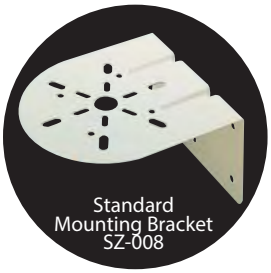


## Wiring

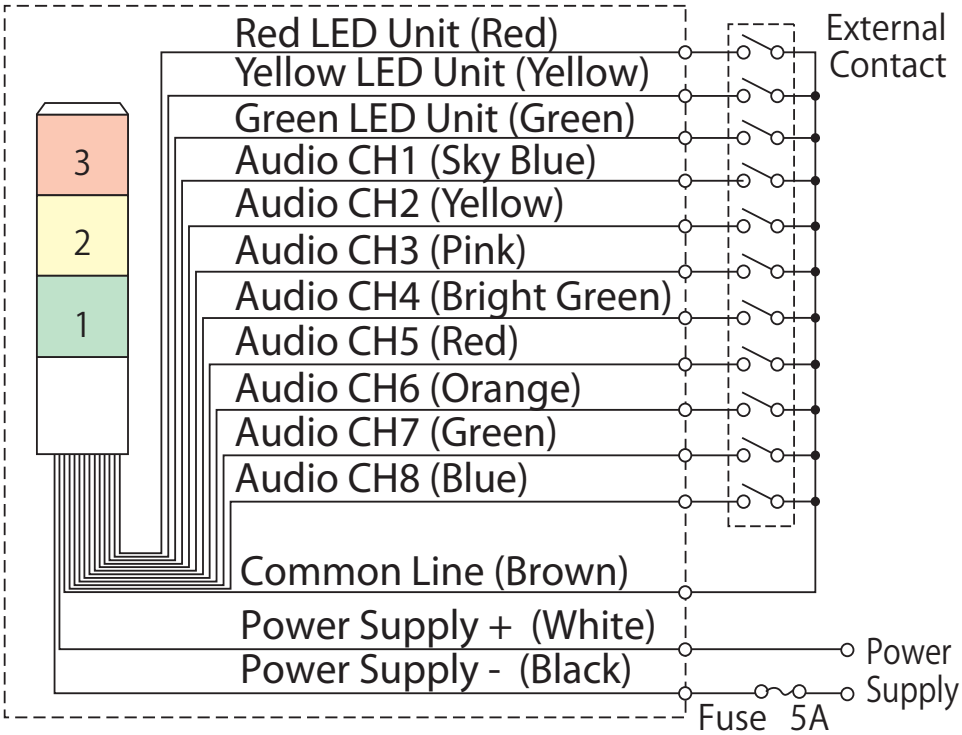


Channel Priority:
8 (Blue) > 7 (Green) > 6 (Orange) > 5 (Red) > 4 (Light Green) > 3 (Pink) > 2 (Yellow) > 1 (Skyblue)
The greater number has priority when any of the channels are activated simultaneously.

## Specifications

| Model | | | Rated Voltage | Operating Voltage Range | Power Consumption | Bulb Ratings | Bulb Repl. No. | Rotations per Minute | Sound Level | Operating Temperature Range | Channels | Mass |
|---|---|---|---|---|---|---|---|---|---|---|---|---|
| Alarm/ Melody | 1 Tier | KJT- 102 | 24V AC/DC | AC/DC 21 - 27V | 25W/18W | 24V 10W | 10 | 135 | 95dB (at 1m) | -20°C - +50°C (85%RH or less) | 8 Ch | 1.4kg |
| | | KJT- 110 | AC 100V | AC 90 - 110V | 20W | 12V 5W | 12 | 120 | | | | 1.7kg |
| | | KJT- 120 | AC 200V | AC 180 - 240V | | | | | | | | |
| | 2 Tier | KJT- 202 | 24V AC/DC | AC/DC 21 - 27V | 36W/28W | 24V 10W | 10 | 135 | | | | 2.0kg |
| | | KJT- 210 | AC 100V | AC 90 - 110V | 26W | 12V 5W | 12 | 120 | | | | 2.4kg |
| | | KJT- 220 | AC 200V | AC 180 - 240V | | | | | | | | |
| | 3 Tier | KJT- 302 | 24V AC/DC | AC/DC 21 - 27V | 47W/38W | 24V 10W | 10 | 135 | | | | 2.6kg |
| | | KJT- 310 | AC 100V | AC 90 - 110V | 32W | 12V 5W | 12 | 120 | | | | 3.0kg |
| | | KJT- 320 | AC 200V | AC 180 - 240V | | | | | | | | |



Courtesy of Steven Engineering, Inc. - (800) 258-9200 - sales@steveneng.com - www.stevenengineering.com

MEMO

For more details, visit our website at http://www.patlite.com



Courtesy of Steven Engineering, Inc. - (800) 258-9200 - sales@steveneng.com - www.stevenengineering.com

# Optional Parts

Courtesy of Steven Engineering, Inc. - (800) 258-9200 - sales@steveneng.com - www.stevenengineering.com

# Optional Parts

## Wall Mount Bracket

- **Avoid Potential Trouble when moving machinery!**
- **Easily removable connection! (Wiring unplugs along with it!)**
- **Easy to disconnect when needing repair!**

BEFORE · · ·

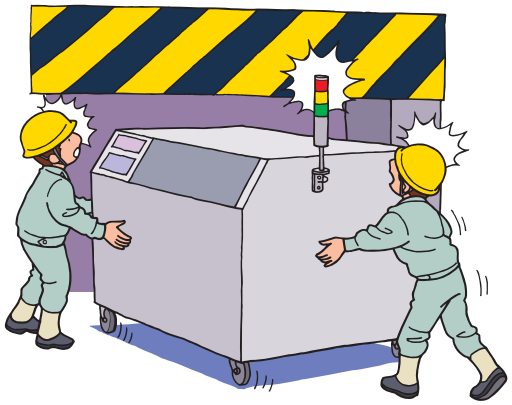

AFTER · · ·

### Easy steps to installing the bracket

Drill the holes on the machine to attach the mounting connector and bracket.

Fix the mounting parts onto the machine with the proper hardware.

Join the connectors together.

Hook the mounting bracket onto the metal tabs and attach it with the screws.

SZ-020 (For φ21.7mm Pole)
SZ-021 (For φ17.3mm Pole)

Mounting Dimensions

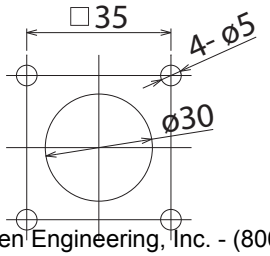


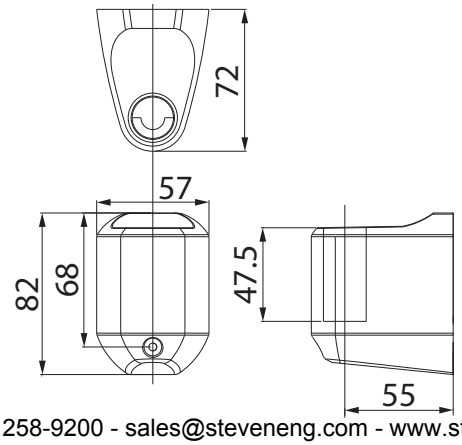


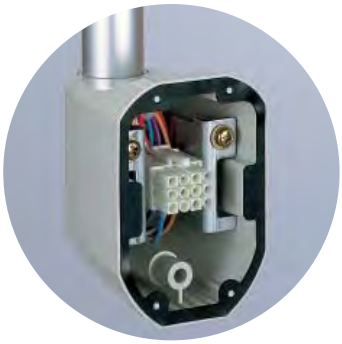

Wire connector SZ-020-001
(Sold Separately)



Courtesy of Steven Engineering, Inc. - (800) 258-9200 - sales@steveneng.com - www.stevenengineering.com

# MP-B

## Signal Tower Option

RoHS CE UL®

Φ30

85db at 1m

Electronic Sound 1

FEATURES

- Double-insulation for enhanced durability and safety
- Direct mount installation with just a single screw
- Main body made of heat resistant ABS resin for superior impact resistance
- Compatible with the MP and MPS Signal Tower
  (The Red module is required when using the optional MP-B)

## Part Names and Dimensions

- Operates in conjunction with the Red LED module (Alarm activation with other colors must be special ordered).

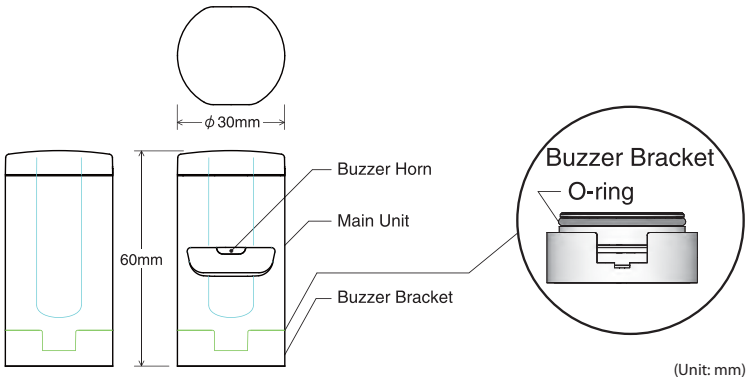


## Specifications

| Model | Rated Voltage | Sound Level | Power Consumption |
|---|---|---|---|
| ◎ MP-B | AC/DC 24V | 80dB (at 1m) | 0.7W |

◎ Requires Red LED Module

# DEB

## LED Lamp

FEATURES

- LED Color emits a Warm White color
- Suitable lighting for Patlite Compatible Rotating Lamp Series.
- Replacable with AC Lamp Bulbs for Patlite Products.

COMPATIBLE MODELS:

SKH-110A/120A, SKHB-100A/200A, SKH-100EA/200EA
RH/RK(B)-100A/120AUL/200A/240AUL
WH/WK(B)(S)-100A/200A
KJS(B)-110/210/310/120/220/320
KJ(B)-110/210/310/410/120/220/320/420
KJT-110/210/310/120/220/320

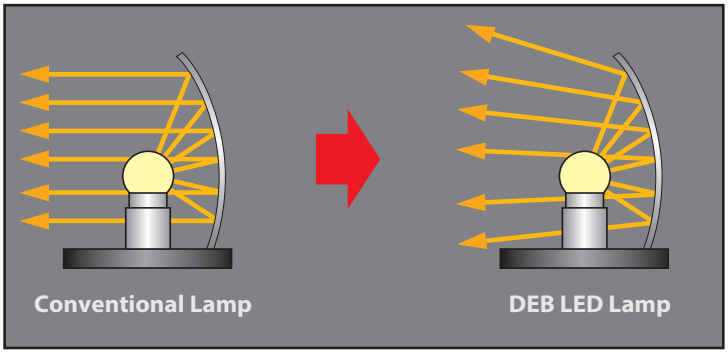

## Specifications

| Model | Rated Voltage | Power Consumption | LED Color | Lamp Base | Mass |
|---|---|---|---|---|---|
| DEB-15SBA-CL | AC 12V | 1.7W (at AC13.5V) | Warm White | BA15S | 9.8g |



Courtesy of Steven Engineering, Inc. - (800) 258-9200 - sales@steveneng.com - www.stevenengineering.com

# Wall Mount Bracket

## SZ-018

Ivory White

## SZ-018U

Silver

## SZ-018K

Black

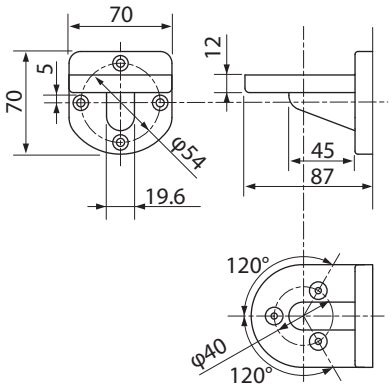

## SZ-028

## SZ-017

(For φ21.7mm Pole)

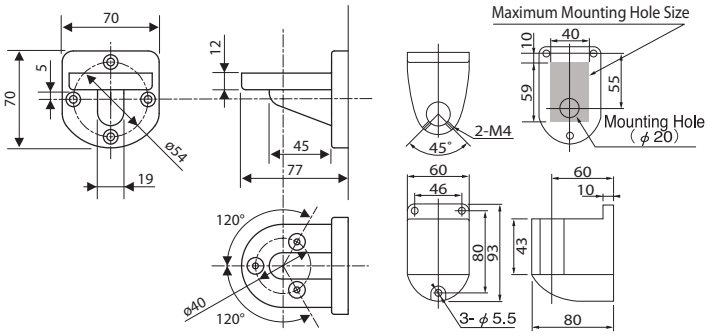


## SZ-012 (Pole not included)

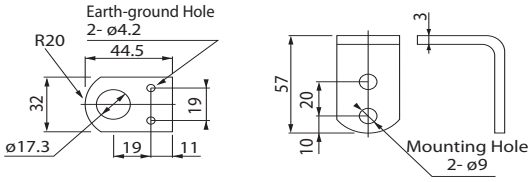


## SZ-013 (Pole not included)

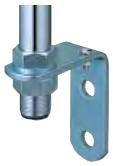

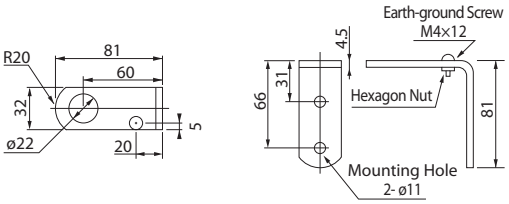

## SZ-023

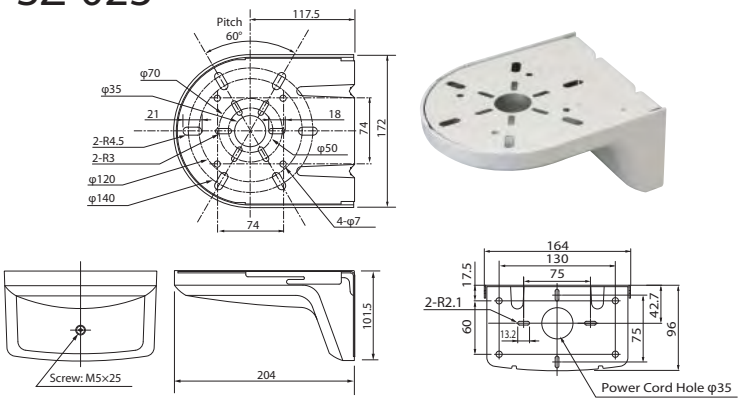




## SZ-007

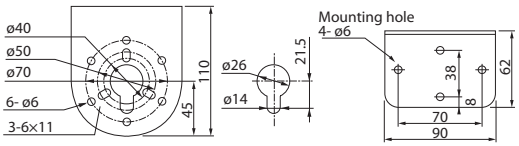


## SZ-008

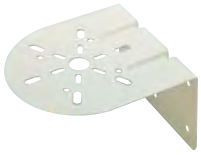

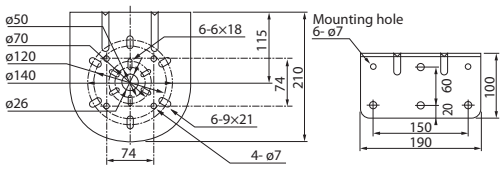


| Model | Material | Compatable Models |
|---|---|---|
| SZ-017 | Aluminum Alloy Die-cast | LME, RUP |
| SZ-018 | PBT/ABS Resin | LU7, LME, LHE |
| SZ-028 | | |
| SZ-020 | ABS Resin | LU5, LU7, LME, LMS, RUP, LC, LCS, LE, LES-A |
| SZ-021 | | |
| SZ-007 | Electro-galvanized Steel | LU7, LHE-A, Pitch for φ50, φ70, φ120, φ140 and 74mm$^2$ |
| SZ-008 | | |
| SZ-023 | Bracket: Steel<br>Bracket Cover: ABS | Pitch for φ50, φ70, φ120, φ140, and 74mm$^2$ |
| SZ-012 | Hot-rolled Mild Steel | LCE, LCS, LE, LES, LME, ME, MP |
| SZ-013 | | |



Courtesy of Steven Engineering, Inc. - (800) 258-9200 - sales@steveneng.com - www.stevenengineering.com

# Mounting Pole

## φ50 (φ40)

SZ-60L
SZ-80L
RoHS

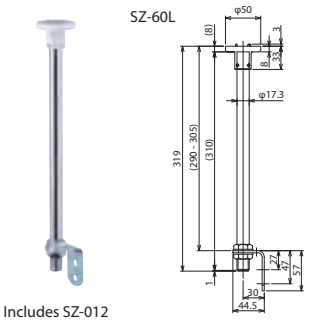


Includes SZ-012

SZ-60T
RoHS

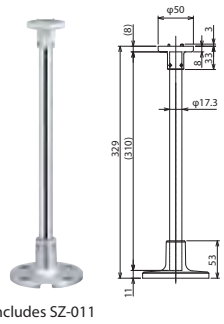


Includes SZ-011

## φ60

SZ-70L
RoHS

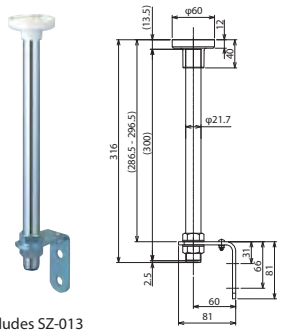


Includes SZ-013

## φ70

SZ-50L
RoHS

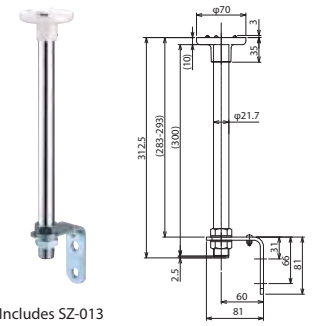


Includes SZ-013

SZ-50T
RoHS

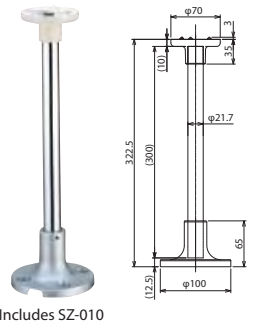


Includes SZ-010

## 70 sq.

SZ-40L
RoHS

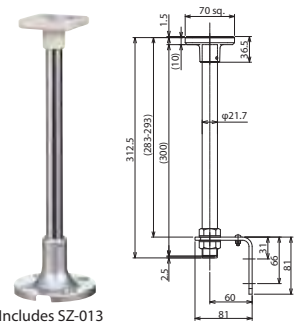


Includes SZ-013

SZ-40T
RoHS

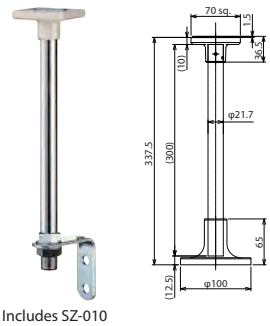


Includes SZ-010

## φ81

SZ-30L
RoHS

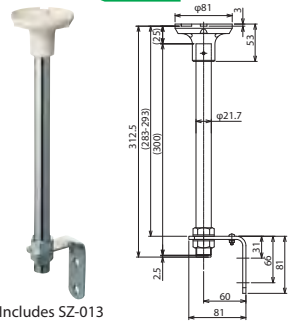


Includes SZ-013
Cannot use with Rubber Gasket.

SZ-30T
RoHS

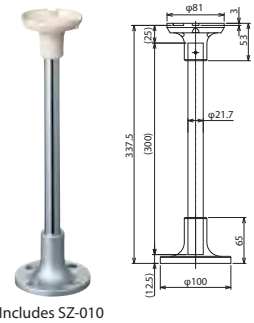


Includes SZ-010
Cannot use with Rubber Gasket.

| Model | Material | | | | | |
|---|---|---|---|---|---|---|
| | Upper Bracket | Pole | 'L' Bracket | Cord Bushing | Mounting Bracket | Compatable Models |
| SZ-80L | ABS Resin | Carbon-steel Pipe | SPHC | 6/6 Nylon | — | LCE-W |
| SZ-60L | ADC12 | | SPHC | 6/6 Nylon | — | LE-W, LES-AW |
| SZ-60T | | | — | — | ADC12 | |
| SZ-70L | ABS Resin | Carbon-steel Pipe | SPHC | EPT | — | LME-W |
| SZ-50L | ADC12 | | SPHC | EPT | — | LU7, LHE-A |
| SZ-50T | | | — | — | ADC12 | |
| SZ-40L | ADC12 | Carbon-steel Pipe | SPHC | EPT | | KUS |
| SZ-40T | | | — | — | ADC12 | |
| SZ-30L | ABS Resin | | SPHC | EPT | — | RLE, RU, RH, PS, PES-A |
| SZ-30T | | | — | — | ADC12 | |

ADC12: Aluminum Alloy Die-cast SPHC: Hot Rolled Milled (Sheet) Steel
EPT: Ethylene Propylene Rubber

# Mounting Bracket

SZ-010
RoHS

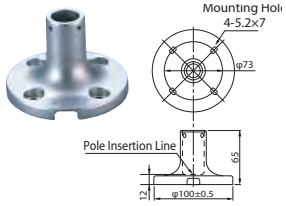


SZ-011
RoHS

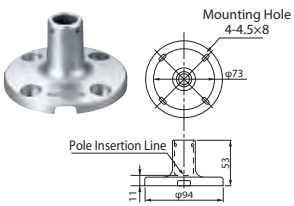


SZ-016A

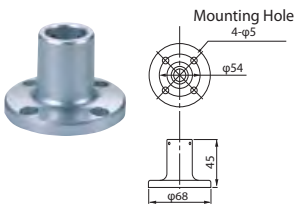


SZ-70-B

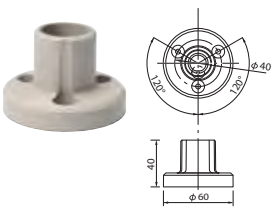


SZ-014
RoHS

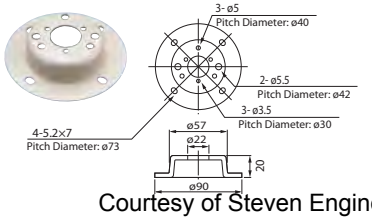


| Model | Material | Compatable Models |
|---|---|---|
| SZ-010 | Aluminum Alloy Die-cast | RUP, LME, LMS, LHE |
| SZ-011 | | LCE, LCS, LE, LES-A |
| SZ-016A | | LU5, LU7, RUP, LME, LMS, LHE |
| SZ-014 | Cold-rolled Milled Steel | LE, LES-A |
| SZ-70-B | ABS | φ21.7mm Pole |



Courtesy of Steven Engineering, Inc. - (800) 258-9200 - sales@steveneng.com - www.stevenengineering.com

## LU7 Upper Bracket

SZ-50-U

Ivory White

SZ-50U-U

Silver

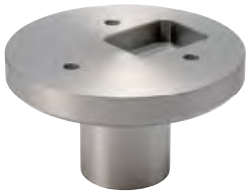

SZ-50NPT

SZ-50K-U

Black

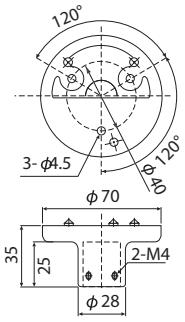


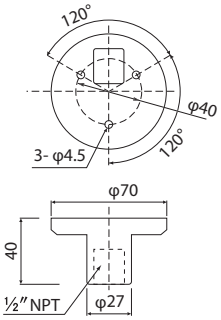


## LU5 Upper Bracket

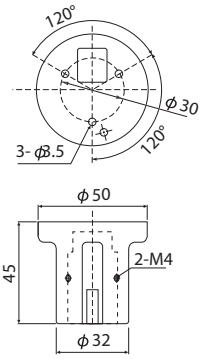


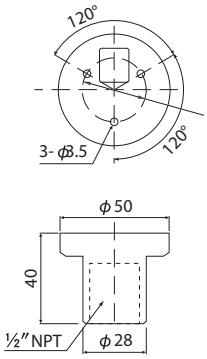


## Pole

**Steel Pole**

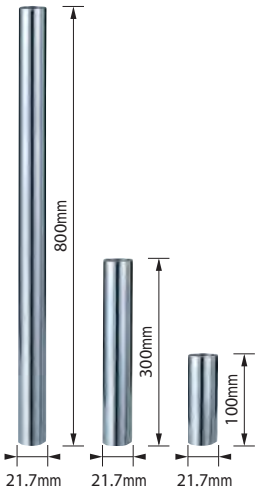


| | |
|---|---|
| 800mm | : **POLE-800S21** |
| 300mm | : **POLE-300S21** |
| 100mm | : **POLE-100S21** |

**Aluminum Pole**

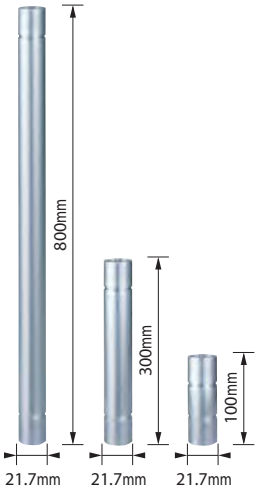


| | |
|---|---|
| 800mm | : **POLE-800A21** |
| 300mm | : **POLE-300A21** |
| 100mm | : **POLE-100A21** |

**Black Aluminum Pole**

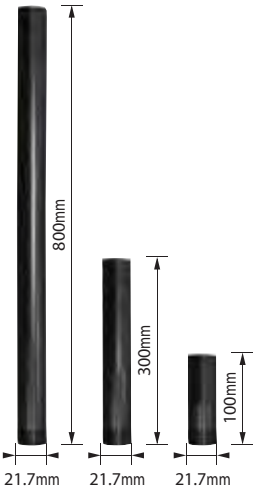


| | |
|---|---|
| 800mm | : **POLE-800A21K** |
| 300mm | : **POLE-300A21K** |
| 100mm | : **POLE-100A21K** |

## NPT Adaptor

**SZ-904**

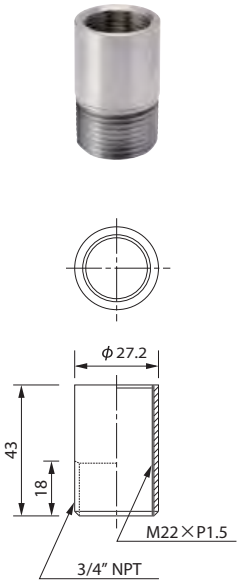


**SZ-903**

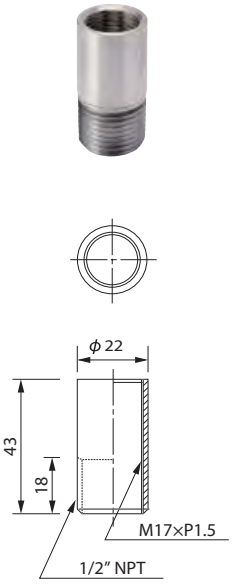


## Rubber Gasket

SZ-200A RoHS

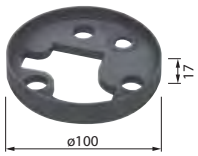


| Model | Material | Compatable Models |
|---|---|---|
| SZ-200A | Ethylene Propylene Rubber | RH(B) |
| SZ-210 | | RU, RLE, PSE, PES |

Mounting Dimensions

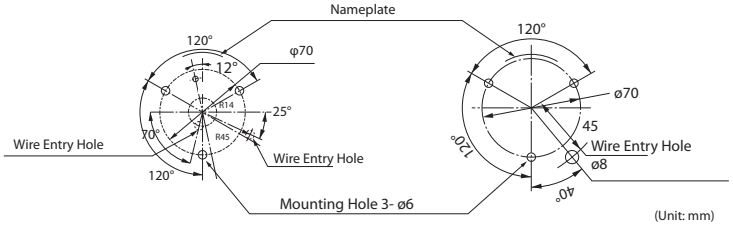


(Unit: mm)

SZ-210 RoHS

Mounting Dimension

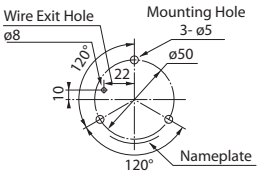


(Unit: mm)



Courtesy of Steven Engineering, Inc. - (800) 258-9200 - sales@steveneng.com - www.stevenengineering.com

# LS7 Options

Wall Mounting Bracket SZ-110

SZ-110

SZ-110S

SZ-110D

Multi-mount Bracket SZ-130

SZ-130

SZ-130S

SZ-130D

Platform Bracket SZ-100

SZ-100

SZ-100S

SZ-100D

**Front (Audible Alarm Opening)**

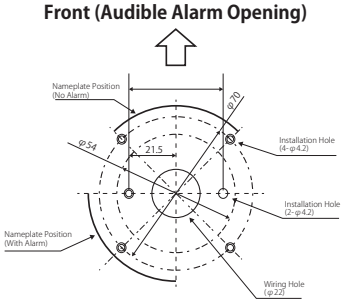


## Replacement Parts

Outer Cover for LS7*
Part No.:
B45110011-F1

O-ring for LS7
Part No.:
Z35721039-F1

Mount Cover for LS7 (Accessory)
Part No.:
B81910001-F1

M12 Connector & Cable
SZ-120-02 Cable Length 2m (XS2F-D821-DH0-R)
SZ-120-05 Cable Length 5m (XS2F-D821-GH0-R)
SZ-120-10 Cable Length 10m (XS2F-D821-JH0-R)
* Only for connecting to the LS7.

# CLA Options

Rear Attachment
(Magnetic Mount)
Model SZ-310ARM

Side Attachment
(Screw Mount)
Model SZ-310AS

Side Attachment
(CLB-24N Compatible)
Model SZ-310ASB

Rear Attachment
(Stainless Steel Screw Mount)
Model SZ-310EU

# CLK Options

## M12 Quick Disconnect

4-wire M12 Socket Cable, 5m (No. 1536308)
4-wire M12 SUS Socket Cable, 5m (No. 1552447)

## Daisy Link at a maximum of 5 Units

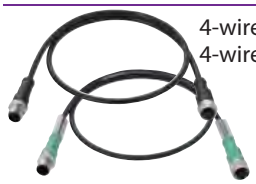

4-wire M12 Link Cable, 0.6m (No. 1518892)
4-wire M12 SUS Link Cable, 0.6m (No. 1552638)

## One-touch Installation

CLK-001

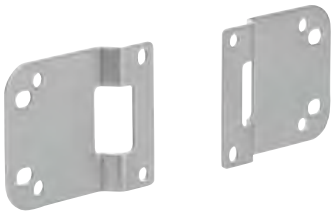

## Angle Adjustment Bracket

SZ-320KS

## Surface-mounting Bracket

SZ-330KP

Courtesy of Steven Engineering, Inc. - (800) 258-9200 - sales@steveneng.com - www.stevenengineering.com

## NHL Options

Wall Mount Bracket NH-WST

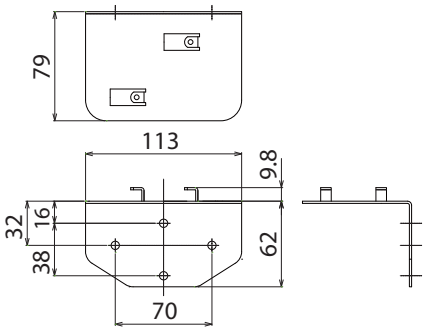

Partition Bracket NH-PST

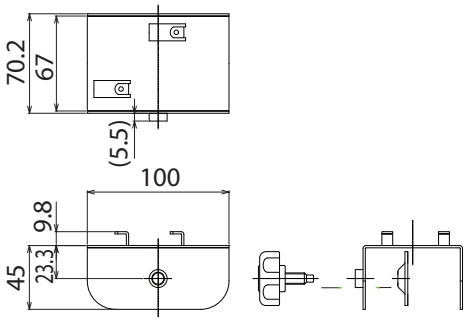


## BKV Options

BK-001 Size Adjustment Bracket

This bracket is used to install the annunciator in a place where holes have already been drilled for legacy PATLITE Products (φ133mm² Type)

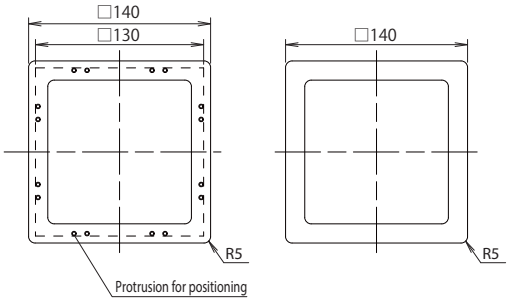


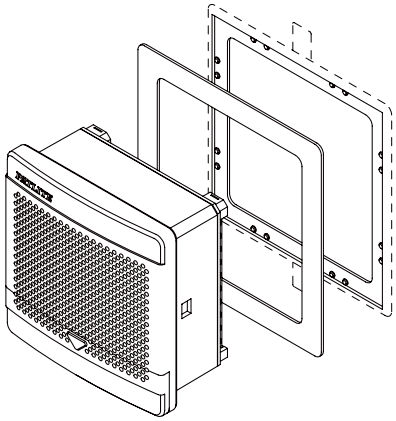

## RFT/RFV Options

Wall Mount Bracket

Ceiling Mount Bracket

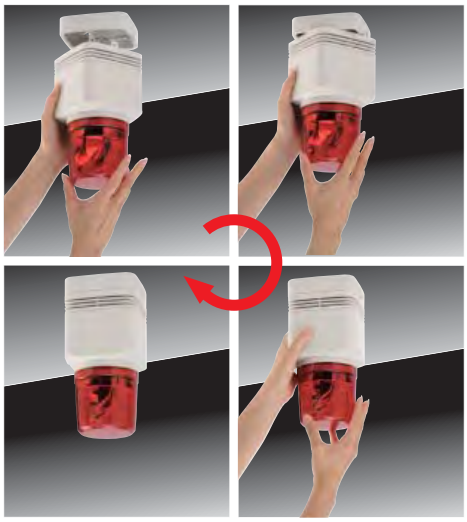

RF-001 Wall Mount Bracket

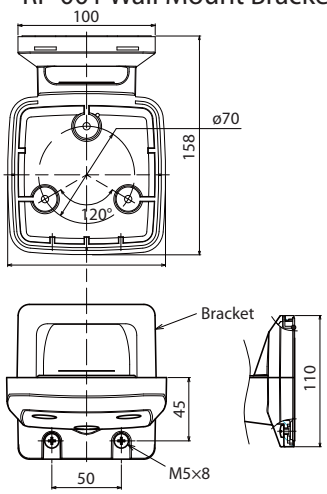


(Unit: mm)

RF-002 Ceiling Mount Bracket

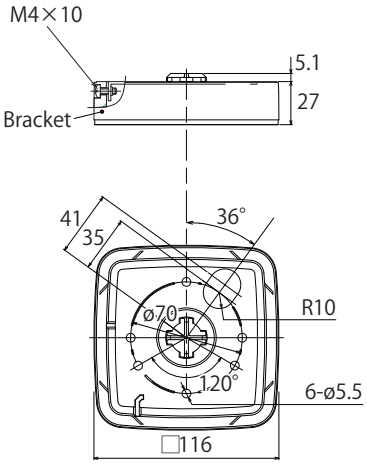


(Unit: mm)

Courtesy of Steven Engineering, Inc. - (800) 258-9200 - sales@steveneng.com - www.stevenengineering.com

# Melody Charts

| Type A | | | (Japan Only) |
|---|---|---|---|
| Beep (slow intermittent) | Stutter (rapid intermittent) | Bell (clear high-pitch) | Yelp (rapid siren) |
| Rapid Hi-Lo | Melody Chime | Synthesized Piano | Synthesized Bell |
| Stutter + Bell | Synthesized Melody Chime | Chime | Call Sign |
| Fur Elise | Maiden's Prayer | Bach Minuet in Gmaj | Annie Laurie |
| London Bridge is falling down | Hol-di-ri-Dia | Mary had a little Lamb | Camptown Races |
| Cuckoo Song | Village Blacksmith | On the Bridge of Avignon | Daydream Believer |
| Amaryllis | Mozart Symphony No. 40 | Quiet Lakeside | Ich bin ein Musikante |
| Spanish Romance | Katyusha | Grandfather's Clock | Ave Maria |

| Type D | | | (Japan Only) |
|---|---|---|---|
| Beep (slow intermittent) | Stutter (rapid intermittent) | Bell (clear high-pitch) | Yelp (rapid siren) |
| Rapid Hi-Lo | Melody Chime | Synthesized Piano | Synthesized Bell |
| Runner | Mamotte Agetai | Chime | Call Sign |
| Iribiao Kikinagara | September | Doyoubino Koibito | Akino Kehai |
| Saafu Tengoku Sukii Tengoku | Iro White-blend | Happy Birthday | Hi Ho |
| I've been working on the Railroad | The Bear Song | Toys Go "Cha-cha-cha" | Konnako Irukana |
| Schubert's Lullaby | Rudolph the red-nosed Reindeer | She Wore a Yellow Ribbon | My Darling, Clementine |
| Yellow Rose of Texas | Yankee Doodle | When the Saints Go Marching In | Londonderry Air |

| Type C | | | (Japan Only) |
|---|---|---|---|
| Beep (slow intermittent) | Stutter (rapid intermittent) | Bell (clear high-pitch) | Yelp (rapid siren) |
| Rapid Hi-Lo | Melody Chime | Synthesized Piano | Synthesized Bell |
| Stutter + Bell | Synthesized Melody Chime | Chime | Call Sign |
| Can't take my eyes off of you | Top of the World | The Entertainer | Amazing Grace |
| Amairono Kamino Otome | Les Champs-Elysees | Canon | Rara Sunshine |
| Uchuusenkan Yamamoto | Oshiete | Makenaide | Gonna Fly Now (Theme from "Rocky") |
| I don't Wanna Miss a Thing | Yozorano Mukou | Aiwa Katsu | Haruyo Koi |
| Gattsudaze | Odoru Ponpokorin | Imasugu Kisu Mi | Truth |

| Type E | | | (Worldwide) |
|---|---|---|---|
| Beep (slow intermittent) | Stutter + Bell | Inverted Reveille | Annie Laurie |
| Stutter (rapid intermittent) | Melody Chime | Galactic Motor | London Bridge is falling down |
| Bell (clear high-pitch) | Chime | Ringing Phone | Mary had a little Lamb |
| Yelp (rapid siren) | Call Sign | Two Tone | Camptown Races |
| Rapid Hi-Lo | Train Ride | Alarm Clock | Amaryllis |
| Melody Chime | Galloping Hi-Lo | Ringing Hi-Lo | Mozart Symphony No. 40 |
| Synthesized Piano | Alien Chatter | Fur Elise | Ave Maria |
| Synthesized Bell | Falling Crystals | Bach Minuet in Gmaj | Grandfather's Clock |

| Type-F | | | | (Japan Only) |
|---|---|---|---|---|
| Beep (slow intermittent) | Spring Melody | A Maiden's Prayer | Quiet Lakeside | BANZAI SUKIDE YOKATTA |
| Stutter (rapid intermittent) | Game Intermission | Bach Minuet in Gmaj | The Music Man | NAMONAKI UTA |
| Bell (clear high-pitch) | Jalopy Horn | Annie Laurie | Spanish Romance | SOUSEINO AKUERION |
| Yelp (rapid siren) | ET Doorbell | London Bridge is falling down | Katyusha | MAMBO NO 5 |
| Rapid Hi-Lo | RR-crossing | Holdiridia | Ave Maria | The Parade of the Tin Soldiers |
| Melody Chime | Digital Train Whistle | Mary had a little Lamb | Grandfather's Clock | Turkey in the Straw |
| Synthesized Piano | Train Ride | The Camptown Races | RHYTHM AND POLICE | Aka tombo |
| Synthesized Bell | Starting Notice Chime1 | Cuckoo Song | ZANKOKUNA TENSHINO TEEZE | Funiculi, Funicula |
| Stutter + Bell | Starting Notice Chime2 | Village Blacksmith | MAJINGAA ZETTO | Furusato |
| Melody Chime | Starting Notice Chime3 | On the Bridge of Avignon | HATARAKU KURUMA | Beautiful Dreamer |
| Chime | Ending Notice Chime1 | Daydream Believer | NINGENTTE IINA | JOLLY HOLIDAY |
| Call Sign | Ending Notice Chime2 | Amaryllis | ROBINSON | |
| Galactic Hovercraft | Fur Elise | Mozart Symphony No. 40 | WORLD FOOTBALL ANTHEM | |

| Type-G | | | | (Worldwide) |
|---|---|---|---|---|
| Beep (slow intermittent) | Galloping Hi-Lo | ET Doorbell | Mozart Symphony No. 40 | Polka Tramblanka |
| Stutter (rapid intermittent) | Alien Chatter | RR-crossing | Ave Maria | O Vreneli |
| Bell (clear high-pitch) | Falling Crystals | Starting Notice Chime1 | Grandfather's Clock | KAERUNO GASSHOU |
| Yelp (rapid siren) | Inverted Reveille | Starting Notice Chime2 | The Parade of the Tin Soldiers | El Condor Pasa (If I Could) |
| Rapid Hi-Lo | Galactic Motor | Ending Notice Chime1 | If You're Happy and You Know It | Hungarian Dance No.5 |
| Melody Chime | Ringing Phone | Ending Notice Chime2 | Flea Waltz | William Tell Overture |
| Synthesized Piano | Two Tone | Fur Elise | Turkey in the Straw | Pomp and Circumstance |
| Synthesized Bell | Alarm Clock | Bach Minuet in Gmaj | The Battle Hymn of the Republic | Comedians' Galop |
| Stutter + Bell | Ringing Hi-Lo | Annie Laurie | J'ai perdu le do de ma clarinette | Nedelka |
| Melody Chime | Galactic Hovercraft | London Bridge is falling down | Can-can | Moonlight Serenade |
| Chime | Spring Melody | Mary had a little Lamb | Radetzky March | WAREWA UMINO KO |
| Call Sign | Game Intermission | The Camptown Races | Funiculi, Funicula | |
| Train Ride | Jalopy Horn | Amaryllis | Csikos Post | |

## Use of Copyrighted Material

PATLITE Corporation has not applied for permission to use certain copyrighted music or songs recorded for Type-A, Type-C, Type-D and Type-F melody charts outside of Japan. Therefore, please contact the local copyright association for permission before using the product in case this product is used outside of Japan. Melody charts Type-E and Type-G are recommended for use outside of Japan as this playlist does not include copyrighted music or songs, and permission is not required.



Courtesy of Steven Engineering, Inc. - (800) 258-9200 - sales@steveneng.com - www.stevenengineering.com

# Replacement Bulbs

| Model | Bulb No. | Ratings | Part No. |
|---|---|---|---|
| RP35/BA15S | 1 | 12V 35W | D01203501-F1 |
| | 2 | 24V 35W | D02403501-F1 |
| RP35/BA15D | 5 | 48V 35W | D04803502-F1 |
| G18/BA15S | 8 | 6V 3W | D00600303-F1 |
| | 9 | 12V 10W | D01201003A-F1 |
| | 10 | 24V 10W | D02401003A-F1 |
| | 11 | 48V 10W | D04801003-F1 |
| | 12 | 12V 5W | D01200503A-F1 |
| T20/E12 | 13 | 30V 10W | D03001006A-F1 |
| | 14 | 110V 10W | D11001006A-F1 |
| | 15 | 220V 10W | D22001006A-F1 |
| | 16 | 110V 15W | D11001506A-F1 |
| | 17 | 220V 15W | D22001506A-F1 |
| G14/BA9S | 18 | 12V 6W | D01200604-F1 |
| | 19 | 24V 6W | D02400604-F1 |
| T10/E10 | 22 | 110V 3W | D11000307-F1 |
| | 27 | 12V 0.11A | D012/1107-F1 |
| | 28 | 24V 0.11A | D024/1107-F1 |
| RP35/BA15D | 36 | 120V 40W (Vibration Resistant) | D12004024-F1 |
| | 37 | 220V 30W | D22003024-F1 |

* Some bulbs may not be available due to part or product discontinuation without prior notice.

| Model | Bulb No. | Ratings | Part No. |
|---|---|---|---|
| Vibration Resistant<br>T20/BA15D | 39 | 28V 11W | D02801111-F1 |
| | 40 | 110V 12W | D11001211-F1 |
| | 41 | 250V 11W | D25001111-F1 |
| S25/BA15S | 42 | 12V 23W | D01202305-F1 |
| | 43 | 24V 25W | D02402505-F1 |
| Vibration Resistant<br>T20/BA15D | 50 | 28V 20W | D02802011-F1 |
| Vibration Resistant<br>T20/BA15D | 51 | 110V 20W | D11002011-F1 |
| | 53 | 250V 20W | D25002011-F1 |
| G18/BA15S | 54 | 12V 15W | D012001503-F1 |
| | 55 | 24V 20W | D02402003-F1 |
| | 9 | AC12V (50/60Hz) 1.7W (at 13.5VAC) | DEB-15SBA-CL |

## *Look for this Mark:*

**Model DEB LED Lamp**
**Recommended Product**
For more details on Model DEB
Refer to the "Replacement Bulb"
Section at the end of this Catalog



Courtesy of Steven Engineering, Inc. - (800) 258-9200 - sales@steveneng.com - www.stevenengineering.com

# UL Certification Model
# Model Comparison Table

The "UL Registration Model", which has acquired the UL certification, is printed on the model's name plate as is for our company product. The "UL Registration Model" does not show the tier number of the actual model. Therefore, please refer to the following model comparison table when choosing the model you need. When making an order, please verify the detailed information, such as product color, etc., which is listed on the page for each product. (As of June, 30, 2011)

| Model | UL Registration Model |
|---|---|
| ME-102A | ME-_02A |
| ME-202A | ME-_02A |
| ME-302A | ME-_02A |
| ME-402A | ME-_02A |
| ME-502A | ME-_02A |
| MES-102A | MES-_02A |
| MES-202A | MES-_02A |
| MES-302A | MES-_02A |
| MES-402A | MES-_02A |
| MES-502A | MES-_02A |
| MP-102 | MP-_02 |
| MP-202 | MP-_02 |
| MP-302 | MP-_02 |
| MP-402 | MP-_02 |
| MP-502 | MP-_02 |
| MPS-102 | MPS-_02 |
| MPS-202 | MPS-_02 |
| MPS-302 | MPS-_02 |
| MPS-402 | MPS-_02 |
| MPS-502 | MPS-_02 |
| LCE-102A | LCE-_02A |
| LCE-202A | LCE-_02A |
| LCE-302A | LCE-_02A |
| LCE-402A | LCE-_02A |
| LCE-502A | LCE-_02A |
| LCE-1M2A | LCE-_M2A |
| LCE-2M2A | LCE-_M2A |
| LCE-3M2A | LCE-_M2A |
| LCE-4M2A | LCE-_M2A |
| LCE-5M2A | LCE-_M2A |
| LCE-102AW | LCE-_02AW |
| LCE-202AW | LCE-_02AW |
| LCE-302AW | LCE-_02AW |
| LCE-402AW | LCE-_02AW |
| LCE-502AW | LCE-_02AW |
| LCE-1M2AW | LCE-_M2AW |
| LCE-2M2AW | LCE-_M2AW |
| LCE-3M2AW | LCE-_M2AW |
| LCE-4M2AW | LCE-_M2AW |
| LCE-5M2AW | LCE-_M2AW |
| LCE-102AFB | LCE-_02AFB |
| LCE-202AFB | LCE-_02AFB |
| LCE-302AFB | LCE-_02AFB |
| LCE-402AFB | LCE-_02AFB |
| LCE-502AFB | LCE-_02AFB |
| LCE-1M2AFB | LCE-_M2AFB |
| LCE-2M2AFB | LCE-_M2AFB |
| LCE-3M2AFB | LCE-_M2AFB |
| LCE-4M2AFB | LCE-_M2AFB |
| LCE-5M2AFB | LCE-_M2AFB |
| LCE-102AFBK | LCE-_02AFBK |
| LCE-202AFBK | LCE-_02AFBK |
| LCE-302AFBK | LCE-_02AFBK |
| LCE-402AFBK | LCE-_02AFBK |
| LCE-502AFBK | LCE-_02AFBK |
| LCE-102AFBK | LCE-_M2AFBK |
| LCE-202AFBK | LCE-_M2AFBK |
| LCE-302AFBK | LCE-_M2AFBK |
| LCE-402AFBK | LCE-_M2AFBK |
| LCE-502AFBK | LCE-_M2AFBK |

| Model | UL Registration Model |
|---|---|
| LCE-1M2AFBW | LCE-_M2AFBW |
| LCE-2M2AFBW | LCE-_M2AFBW |
| LCE-3M2AFBW | LCE-_M2AFBW |
| LCE-4M2AFBW | LCE-_M2AFBW |
| LCE-5M2AFBW | LCE-_M2AFBW |
| LCS-102A | LCS-_02A |
| LCS-202A | LCS-_02A |
| LCS-302A | LCS-_02A |
| LCS-402A | LCS-_02A |
| LCS-502A | LCS-_02A |
| LCS-102AK | LCS-_02AK |
| LCS-202AK | LCS-_02AK |
| LCS-302AK | LCS-_02AK |
| LCS-402AK | LCS-_02AK |
| LCS-502AK | LCS-_02AK |
| LES-102A | LES-_02A |
| LES-202A | LES-_02A |
| LES-302A | LES-_02A |
| LES-402A | LES-_02A |
| LES-502A | LES-_02A |
| LES-102AW | LES-_02AW |
| LES-202AW | LES-_02AW |
| LES-302AW | LES-_02AW |
| LES-402AW | LES-_02AW |
| LES-502AW | LES-_02AW |
| LE-101P | LE-_01P |
| LE-201P | LE-_01P |
| LE-301P | LE-_01P |
| LE-401P | LE-_01P |
| LE-501P | LE-_01P |
| LE-102P | LE-_02P |
| LE-202P | LE-_02P |
| LE-302P | LE-_02P |
| LE-402P | LE-_02P |
| LE-502P | LE-_02P |
| LE-101W | LE-_01W |
| LE-201W | LE-_01W |
| LE-301W | LE-_01W |
| LE-401W | LE-_01W |
| LE-501W | LE-_01W |
| LE-102W | LE-_02W |
| LE-202W | LE-_02W |
| LE-302W | LE-_02W |
| LE-402W | LE-_02W |
| LE-502W | LE-_02W |
| LE-101FBP | LE-_01FBP |
| LE-201FBP | LE-_01FBP |
| LE-301FBP | LE-_01FBP |
| LE-401FBP | LE-_01FBP |
| LE-501FBP | LE-_01FBP |
| LE-102FBP | LE-_02FBP |
| LE-202FBP | LE-_02FBP |
| LE-302FBP | LE-_02FBP |
| LE-402FBP | LE-_02FBP |
| LE-502FBP | LE-_02FBP |
| LE-101FBW | LE-_01FBW |
| LE-201FBW | LE-_01FBW |
| LE-301FBW | LE-_01FBW |
| LE-401FBW | LE-_01FBW |
| LE-501FBW | LE-_01FBW |

| Model | UL Registration Model |
|---|---|
| LE-102FBW | LE-_02FBW |
| LE-202FBW | LE-_02FBW |
| LE-302FBW | LE-_02FBW |
| LE-402FBW | LE-_02FBW |
| LE-502FBW | LE-_02FBW |
| LFH-12 | LFH-12 |
| LFH-24 | LFH-24 |
| LFH-48 | LFH-48 |
| LFH-M2 | LFH-M2 |
| LME-102 | LME-_02 |
| LME-202 | LME-_02 |
| LME-302 | LME-_02 |
| LME-402 | LME-_02 |
| LME-502 | LME-_02 |
| LME-102L | LME-_02L |
| LME-202L | LME-_02L |
| LME-302L | LME-_02L |
| LME-402L | LME-_02L |
| LME-502L | LME-_02L |
| LME-102W | LME-_02W |
| LME-202W | LME-_02W |
| LME-302W | LME-_02W |
| LME-402W | LME-_02W |
| LME-502W | LME-_02W |
| LME-102FB | LME-_02FB |
| LME-202FB | LME-_02FB |
| LME-302FB | LME-_02FB |
| LME-402FB | LME-_02FB |
| LME-502FB | LME-_02FB |
| LME-102FBL | LME-_02FBL |
| LME-202FBL | LME-_02FBL |
| LME-302FBL | LME-_02FBL |
| LME-402FBL | LME-_02FBL |
| LME-502FBL | LME-_02FBL |
| LME-102FBK | LME-_02FBK |
| LME-202FBK | LME-_02FBK |
| LME-302FBK | LME-_02FBK |
| LME-402FBK | LME-_02FBK |
| LME-502FBK | LME-_02FBK |
| LME-102FBW | LME-_02FBW |
| LME-202FBW | LME-_02FBW |
| LME-302FBW | LME-_02FBW |
| LME-402FBW | LME-_02FBW |
| LME-502FBW | LME-_02FBW |
| LME-112 | LME-_12 |
| LME-212 | LME-_12 |
| LME-312 | LME-_12 |
| LME-412 | LME-_12 |
| LME-512 | LME-_12 |
| LME-112L | LME-_12L |
| LME-212L | LME-_12L |
| LME-312L | LME-_12L |
| LME-412L | LME-_12L |
| LME-512L | LME-_12L |
| LME-112W | LME-_12W |
| LME-212W | LME-_12W |
| LME-312W | LME-_12W |
| LME-412W | LME-_12W |
| LME-512W | LME-_12W |
| — | — |



Courtesy of Steven Engineering, Inc. - (800) 258-9200 - sales@steveneng.com - www.stevenengineering.com

| Model | UL Registration Model |
|---|---|
| LME-112FB | LME-_12FB |
| LME-212FB | LME-_12FB |
| LME-312FB | LME-_12FB |
| LME-412FB | LME-_12FB |
| LME-512FB | LME-_12FB |
| LME-112FBL | LME-_12FBL |
| LME-212FBL | LME-_12FBL |
| LME-312FBL | LME-_12FBL |
| LME-412FBL | LME-_12FBL |
| LME-512FBL | LME-_12FBL |
| LME-112FBK | LME-_12FBK |
| LME-212FBK | LME-_12FBK |
| LME-312FBK | LME-_12FBK |
| LME-412FBK | LME-_12FBK |
| LME-512FBK | LME-_12FBK |
| LME-112FBW | LME-_12FBW |
| LME-212FBW | LME-_12FBW |
| LME-312FBW | LME-_12FBW |
| LME-412FBW | LME-_12FBW |
| LME-512FBW | LME-_12FBW |
| LME-123 | LME-_23 |
| LME-223 | LME-_23 |
| LME-323 | LME-_23 |
| LME-423 | LME-_23 |
| LME-523 | LME-_23 |
| LME-123L | LME-_23L |
| LME-223L | LME-_23L |
| LME-323L | LME-_23L |
| LME-423L | LME-_23L |
| LME-523L | LME-_23L |
| LME-123W | LME-_23W |
| LME-223W | LME-_23W |
| LME-323W | LME-_23W |
| LME-423W | LME-_23W |
| LME-523W | LME-_23W |
| LME-123FB | LME-_23FB |
| LME-223FB | LME-_23FB |
| LME-323FB | LME-_23FB |
| LME-423FB | LME-_23FB |
| LME-523FB | LME-_23FB |
| LME-123FBL | LME-_23FBL |
| LME-223FBL | LME-_23FBL |
| LME-323FBL | LME-_23FBL |
| LME-423FBL | LME-_23FBL |
| LME-523FBL | LME-_23FBL |
| LME-123FBK | LME-_23FBK |
| LME-223FBK | LME-_23FBK |
| LME-323FBK | LME-_23FBK |
| LME-423FBK | LME-_23FBK |
| LME-523FBK | LME-_23FBK |
| LME-123FBW | LME-_23FBW |
| LME-223FBW | LME-_23FBW |
| LME-323FBW | LME-_23FBW |
| LME-423FBW | LME-_23FBW |
| LME-523FBW | LME-_23FBW |
| LME-102U | LME-_02U |
| LME-202U | LME-_02U |
| LME-302U | LME-_02U |
| LME-402U | LME-_02U |
| LME-502U | LME-_02U |
| LME-102UL | LME-_02UL |
| LME-202UL | LME-_02UL |
| LME-302UL | LME-_02UL |
| LME-402UL | LME-_02UL |
| LME-502UL | LME-_02UL |

| Model | UL Registration Model |
|---|---|
| LME-102UW | LME-_02UW |
| LME-202UW | LME-_02UW |
| LME-302UW | LME-_02UW |
| LME-402UW | LME-_02UW |
| LME-502UW | LME-_02UW |
| LME-102UFB | LME-_02UFB |
| LME-202UFB | LME-_02UFB |
| LME-302UFB | LME-_02UFB |
| LME-402UFB | LME-_02UFB |
| LME-502UFB | LME-_02UFB |
| LME-102UFBL | LME-_02UFBL |
| LME-202UFBL | LME-_02UFBL |
| LME-302UFBL | LME-_02UFBL |
| LME-402UFBL | LME-_02UFBL |
| LME-502UFBL | LME-_02UFBL |
| LME-102UFBK | LME-_02UFBK |
| LME-202UFBK | LME-_02UFBK |
| LME-302UFBK | LME-_02UFBK |
| LME-402UFBK | LME-_02UFBK |
| LME-502UFBK | LME-_02UFBK |
| LME-102UFBW | LME-_02UFBW |
| LME-202UFBW | LME-_02UFBW |
| LME-302UFBW | LME-_02UFBW |
| LME-402UFBW | LME-_02UFBW |
| LME-502UFBW | LME-_02UFBW |
| LME-112U | LME-_12U |
| LME-212U | LME-_12U |
| LME-312U | LME-_12U |
| LME-412U | LME-_12U |
| LME-512U | LME-_12U |
| LME-112UL | LME-_12UL |
| LME-212UL | LME-_12UL |
| LME-312UL | LME-_12UL |
| LME-412UL | LME-_12UL |
| LME-512UL | LME-_12UL |
| LME-112UW | LME-_12UW |
| LME-212UW | LME-_12UW |
| LME-312UW | LME-_12UW |
| LME-412UW | LME-_12UW |
| LME-512UW | LME-_12UW |
| LME-112U | LME-_12U |
| LME-212U | LME-_12U |
| LME-312U | LME-_12U |
| LME-412U | LME-_12U |
| LME-512U | LME-_12U |
| LME-112UL | LME-_12UL |
| LME-212UL | LME-_12UL |
| LME-312UL | LME-_12UL |
| LME-412UL | LME-_12UL |
| LME-512UL | LME-_12UL |
| LME-112UW | LME-_12UW |
| LME-212UW | LME-_12UW |
| LME-312UW | LME-_12UW |
| LME-412UW | LME-_12UW |
| LME-512UW | LME-_12UW |
| LME-112UFB | LME-_12UFB |
| LME-212UFB | LME-_12UFB |
| LME-312UFB | LME-_12UFB |
| LME-412UFB | LME-_12UFB |
| LME-512UFB | LME-_12UFB |
| LME-112UFBL | LME-_12UFBL |
| LME-212UFBL | LME-_12UFBL |
| LME-312UFBL | LME-_12UFBL |
| LME-412UFBL | LME-_12UFBL |
| LME-512UFBL | LME-_12UFBL |

| Model | UL Registration Model |
|---|---|
| LME-112UFBK | LME-_12UFBK |
| LME-212UFBK | LME-_12UFBK |
| LME-312UFBK | LME-_12UFBK |
| LME-412UFBK | LME-_12UFBK |
| LME-512UFBK | LME-_12UFBK |
| LME-112UFBW | LME-_12UFBW |
| LME-212UFBW | LME-_12UFBW |
| LME-312UFBW | LME-_12UFBW |
| LME-412UFBW | LME-_12UFBW |
| LME-512UFBW | LME-_12UFBW |
| LME-123U | LME-_23 |
| LME-223U | LME-_23 |
| LME-323U | LME-_23 |
| LME-423U | LME-_23 |
| LME-523U | LME-_23 |
| LME-123UL | LME-_23UL |
| LME-223UL | LME-_23UL |
| LME-323UL | LME-_23UL |
| LME-423UL | LME-_23UL |
| LME-523UL | LME-_23UL |
| LME-123UW | LME-_23UW |
| LME-223UW | LME-_23UW |
| LME-323UW | LME-_23UW |
| LME-423UW | LME-_23UW |
| LME-523UW | LME-_23UW |
| LME-123UFB | LME-_23UFB |
| LME-223UFB | LME-_23UFB |
| LME-323UFB | LME-_23UFB |
| LME-423UFB | LME-_23UFB |
| LME-523UFB | LME-_23UFB |
| LME-123UFBL | LME-_23UFBL |
| LME-223UFBL | LME-_23UFBL |
| LME-323UFBL | LME-_23UFBL |
| LME-423UFBL | LME-_23UFBL |
| LME-523UFBL | LME-_23UFBL |
| LME-123UFBK | LME-_23UFBK |
| LME-223UFBK | LME-_23UFBK |
| LME-323UFBK | LME-_23UFBK |
| LME-423UFBK | LME-_23UFBK |
| LME-523UFBK | LME-_23UFBK |
| LME-123UFBW | LME-_23UFBW |
| LME-223UFBW | LME-_23UFBW |
| LME-323UFBW | LME-_23UFBW |
| LME-423UFBW | LME-_23UFBW |
| LME-523UFBW | LME-_23UFBW |
| LME-102N | LME-_02N |
| LME-202N | LME-_02N |
| LME-302N | LME-_02N |
| LME-402N | LME-_02N |
| LME-502N | LME-_02N |
| LME-102NL | LME-_02NL |
| LME-202NL | LME-_02NL |
| LME-302NL | LME-_02NL |
| LME-402NL | LME-_02NL |
| LME-502NL | LME-_02NL |
| LME-102NW | LME-_02NW |
| LME-202NW | LME-_02NW |
| LME-302NW | LME-_02NW |
| LME-402NW | LME-_02NW |
| LME-502NW | LME-_02NW |
| LME-102NFB | LME-_02NFB |
| LME-202NFB | LME-_02NFB |
| LME-302NFB | LME-_02NFB |
| LME-402NFB | LME-_02NFB |
| LME-502NFB | LME-_02NFB |



Courtesy of Steven Engineering, Inc. - (800) 258-9200 - sales@steveneng.com - www.stevenengineering.com

# UL Certification Model
# Model Comparison Table

The "UL Registration Model", which has acquired the UL certification, is printed on the model's name plate as is for our company product. The "UL Registration Model" does not show the tier number of the actual model. Therefore, please refer to the following model comparison table when choosing the model you need. When making an order, please verify the detailed information, such as product color, etc., which is listed on the page for each product. (As of June, 30, 2011)

| Model | UL Registration Model | Model | UL Registration Model | Model | UL Registration Model |
|---|---|---|---|---|---|
| LME-102NFBL | LME-_02NFBL | LME-123NW | LME-_23NW | LMS-102K | LMS-_02K |
| LME-202NFBL | LME-_02NFBL | LME-223NW | LME-_23NW | LMS-202K | LMS-_02K |
| LME-302NFBL | LME-_02NFBL | LME-323NW | LME-_23NW | LMS-302K | LMS-_02K |
| LME-402NFBL | LME-_02NFBL | LME-423NW | LME-_23NW | LMS-402K | LMS-_02K |
| LME-502NFBL | LME-_02NFBL | LME-523NW | LME-_23NW | LMS-502K | LMS-_02K |
| LME-102NFBK | LME-_02NFBK | LME-123NFB | LME-_23NFB | LHE-102A | LHE-_02A |
| LME-202NFBK | LME-_02NFBK | LME-223NFB | LME-_23NFB | LHE-202A | LHE-_02A |
| LME-302NFBK | LME-_02NFBK | LME-323NFB | LME-_23NFB | LHE-302A | LHE-_02A |
| LME-402NFBK | LME-_02NFBK | LME-423NFB | LME-_23NFB | LHE-402A | LHE-_02A |
| LME-502NFBK | LME-_02NFBK | LME-523NFB | LME-_23NFB | LHE-502A | LHE-_02A |
| LME-102NFBW | LME-_02NFBW | LME-123NFBL | LME-_23NFBL | LHE-102AFB | LHE-_02AFB |
| LME-202NFBW | LME-_02NFBW | LME-223NFBL | LME-_23NFBL | LHE-202AFB | LHE-_02AFB |
| LME-302NFBW | LME-_02NFBW | LME-323NFBL | LME-_23NFBL | LHE-302AFB | LHE-_02AFB |
| LME-402NFBW | LME-_02NFBW | LME-423NFBL | LME-_23NFBL | LHE-402AFB | LHE-_02AFB |
| LME-502NFBW | LME-_02NFBW | LME-523NFBL | LME-_23NFBL | LHE-502AFB | LHE-_02AFB |
| LME-112N | LME-_12N | LME-123NFBK | LME-_23NFBK | LHE-112A | LHE-_12A |
| LME-212N | LME-_12N | LME-223NFBK | LME-_23NFBK | LHE-212A | LHE-_12A |
| LME-312N | LME-_12N | LME-323NFBK | LME-_23NFBK | LHE-312A | LHE-_12A |
| LME-412N | LME-_12N | LME-423NFBK | LME-_23NFBK | LHE-412A | LHE-_12A |
| LME-512N | LME-_12N | LME-523NFBK | LME-_23NFBK | LHE-512A | LHE-_12A |
| LME-112NL | LME-_12NL | LME-123NFBW | LME-_23NFBW | LHE-112AFB | LHE-_12AFB |
| LME-212NL | LME-_12NL | LME-223NFBW | LME-_23NFBW | LHE-212AFB | LHE-_12AFB |
| LME-312NL | LME-_12NL | LME-323NFBW | LME-_23NFBW | LHE-312AFB | LHE-_12AFB |
| LME-412NL | LME-_12NL | LME-423NFBW | LME-_23NFBW | LHE-412AFB | LHE-_12AFB |
| LME-512NL | LME-_12NL | LME-523NFBW | LME-_23NFBW | LHE-512AFB | LHE-_12AFB |
| LME-112NW | LME-_12NW | LME-102-S ☐ | LME-_02-S | LHE-123A | LHE-_23A |
| LME-212NW | LME-_12NW | LME-102-Q ☐ | LME-_02-Q | LHE-223A | LHE-_23A |
| LME-312NW | LME-_12NW | LME-102W-S ☐ | LME-_02W-S | LHE-323A | LHE-_23A |
| LME-412NW | LME-_12NW | LME-102W-Q ☐ | LME-_02W-Q | LHE-423A | LHE-_23A |
| LME-512NW | LME-_12NW | LME-102FB-S ☐ | LME-_02FB-S | LHE-523A | LHE-_23A |
| LME-112NFB | LME-_12NFB | LME-102FB-Q ☐ | LME-_02FB-Q | LHE-123AFB | LHE-_23AFB |
| LME-212NFB | LME-_12NFB | LME-102FBW-S ☐ | LME-_02FBW-S | LHE-223AFB | LHE-_23AFB |
| LME-312NFB | LME-_12NFB | LME-102FBW-Q ☐ | LME-_02FBW-Q | LHE-323AFB | LHE-_23AFB |
| LME-412NFB | LME-_12NFB | LME-112-S ☐ | LME-_12-S | LHE-423AFB | LHE-_23AFB |
| LME-512NFB | LME-_12NFB | LME-112-Q ☐ | LME-_12-Q | LHE-523AFB | LHE-_23AFB |
| LME-112NFBL | LME-_12NFBL | LME-112W-S ☐ | LME-_12W-S | WEP-302 | WEP-_02 |
| LME-212NFBL | LME-_12NFBL | LME-112W-Q ☐ | LME-_12W-Q | WEP-402 | WEP-_02 |
| LME-312NFBL | LME-_12NFBL | LME-112FB-S ☐ | LME-_12FB-S | WEP-502 | WEP-_02 |
| LME-412NFBL | LME-_12NFBL | LME-112FB-Q ☐ | LME-_12FB-Q | WE-302 | WE-_02 |
| LME-512NFBL | LME-_12NFBL | LME-102FBW-S ☐ | LME-_02FBW-S | WE-402 | WE-_02 |
| LME-112NFBK | LME-_12NFBK | LME-112FBW-Q ☐ | LME-_12FBW-Q | WE-502 | WE-_02 |
| LME-212NFBK | LME-_12NFBK | LME-123-S ☐ | LME-_23-S | WEP-302FB | WEP-_02FB |
| LME-312NFBK | LME-_12NFBK | LME-123-Q ☐ | LME-_23-Q | WEP-402FB | WEP-_02FB |
| LME-412NFBK | LME-_12NFBK | LME-123W-S ☐ | LME-_23W-S | WEP-502FB | WEP-_02FB |
| LME-512NFBK | LME-_12NFBK | LME-123W-Q ☐ | LME-_23W-Q | WE-302FB | WE-_02FB |
| LME-112NFBW | LME-_12NFBW | LME-123FB-S ☐ | LME-_23FB-S | WE-402FB | WE-_02FB |
| LME-212NFBW | LME-_12NFBW | LME-123FB-Q ☐ | LME-_23FB-Q | WE-502FB | WE-_02FB |
| LME-312NFBW | LME-_12NFBW | LME-123FBW-S ☐ | LME-_23FBW-S | WME-202A | WME-_02A |
| LME-412NFBW | LME-_12NFBW | LME-123FBW-Q ☐ | LME-_23FBW-Q | WME-302A | WME-_02A |
| LME-512NFBW | LME-_12NFBW | LMS-102 | LMS-_02 | WME-402A | WME-_02A |
| LME-123N | LME-_23N | LMS-202 | LMS-_02 | WME-502A | WME-_02A |
| LME-223N | LME-_23N | LMS-302 | LMS-_02 | WME-2M2A | WME-_M2A |
| LME-323N | LME-_23N | LMS-402 | LMS-_02 | WME-3M2A | WME-_M2A |
| LME-423N | LME-_23N | LMS-502 | LMS-_02 | WME-4M2A | WME-_M2A |
| LME-523N | LME-_23N | LMS-102L | LMS-_02L | WME-5M2A | WME-_M2A |
| LME-123NL | LME-_23NL | LMS-202L | LMS-_02L | WME-202AFB | WME-_02AFB |
| LME-223NL | LME-_23NL | LMS-302L | LMS-_02L | WME-302AFB | WME-_02AFB |
| LME-323NL | LME-_23NL | LMS-402L | LMS-_02L | WME-402AFB | WME-_02AFB |
| LME-423NL | LME-_23NL | LMS-502L | LMS-_02L | WME-502AFB | WME-_02AFB |
| LME-523NL | LME-_23NL | — | — | — | — |



Courtesy of Steven Engineering, Inc. - (800) 258-9200 - sales@steveneng.com - www.stevenengineering.com

| Model | UL Registration Model | Model | UL Registration Model | Model | UL Registration Model |
|---|---|---|---|---|---|
| WME-2M2AFB | WME-_M2AFB | | | | |
| WME-3M2AFB | WME-_M2AFB | | | | |
| WME-4M2AFB | WME-_M2AFB | | | | |
| WME-5M2AFB | WME-_M2AFB | | | | |
| LKEH-102FAUL | LKEH-_02FAUL | | | | |
| LKEH-202FAUL | LKEH-_02FAUL | | | | |
| LKEH-302FAUL | LKEH-_02FAUL | | | | |
| LKEH-402FAUL | LKEH-_02FAUL | | | | |
| LKEH-102FCUL | LKEH-_02FCUL | | | | |
| LKEH-202FCUL | LKEH-_02FCUL | | | | |
| LKEH-302FCUL | LKEH-_02FCUL | | | | |
| LKEH-402FCUL | LKEH-_02FCUL | | | | |
| LKEH-102FDUL | LKEH-_02FDUL | | | | |
| LKEH-202FDUL | LKEH-_02FDUL | | | | |
| LKEH-302FDUL | LKEH-_02FDUL | | | | |
| LKEH-402FDUL | LKEH-_02FDUL | | | | |
| LKEH-102FEUL | LKEH-_02FEUL | | | | |
| LKEH-202FEUL | LKEH-_02FEUL | | | | |
| LKEH-302FEUL | LKEH-_02FEUL | | | | |
| LKEH-402FEUL | LKEH-_02FEUL | | | | |
| LKEH-102FVUL | LKEH-_02FVUL | | | | |
| LKEH-202FVUL | LKEH-_02FVUL | | | | |
| LKEH-302FVUL | LKEH-_02FVUL | | | | |
| LKEH-402FVUL | LKEH-_02FVUL | | | | |



Courtesy of Steven Engineering, Inc. - (800) 258-9200 - sales@steveneng.com - www.stevenengineering.com

Patlite Sanda Factory & Tech Center — Sanda Factory

Patlite (U.S.A.) Corporation

Patlite Europe GmbH

Patlite Singapore

Patlite China

Patlite Korea

Patlite Taiwan

Global Website: http://www.patlite.com


## PATLITE Corporation

4-4-25, Hommachi, Chuo-ku, Osaka-shi, 541-0053 Japan
International Sales Division
TEL: +81-6-7711-8953 FAX: +81-6-7711-8961 E-mail: overseas@patlite.co.jp

### PATLITE (U.S.A.) Corporation

20130 S. Western Ave. Torrance, CA 90501, U.S.A.
TEL: +1-310-328-3222 FAX: +1-310-328-2676 E-mail: sales@patlite.com

### PATLITE (SINGAPORE) PTE LTD

No.2 Leng Kee Road, #05-01 Thye Hong Centre, Singapore 159086
TEL: +65-6226-1111 FAX: +65-6324-1411 E-mail: sales@patlite.com.sg

### PATLITE (CHINA) Corporation

Room 1102-1103, No.55, Lane 777, Guangzhong Road (West), ZhabeiDistrict, Shanghai, China 200072
TEL: +86-21-6630-8969 FAX: +86-21-6630-8938 E-mail: sales@patlite.cn

### PATLITE Europe GmbH

Am Soeldnermoos 8, D-85399 Hallbergmoos, Germany
TEL.+49 -811 9981 9770-0 FAX.+49-811 9981 9770-9 E-mail: info@patlite.eu

### PATLITE KOREA CO., LTD.

A-2603, Daesung-D-POLIS, 543-1 Gasan-dong, Geumcheon-gu, Seoul, 153-719
TEL.+82-2-523-6636 FAX.+82-2-861-9919 E-mail : sales@patlite.co.kr

### PATLITE TAIWAN CO., LTD.

7F. No. 91, Huayin St, Datong District Taipei, Taiwan R.O.C
TEL.+886-(0)2-2555-1611 FAX.+886-(0)2-2555-1621 E-mail: info@patlite.tw

### P.T. PATLITE INDONESIA (FACTORY)

LOT 321 Batamindo Industrial Park, Jalan Beringin Mukakuning, Batam 29433 Indonesia
TEL: +62-770-61-1123 FAX: +62-770-61-2444


TÜV CERT
DIN EN ISO 9001:2000
Cert. No. 01 100 009197
PT. PATLITE INDONESIA

CAUTION

To ensure correct use of these products, read the Instruction Manual prior to use.
Failure to follow all safeguards can result in fire, electric shock, or other accidents.
Specifications are subject to change without notice.

C0120D 1410D(D)/D(JN)A

# PATLITE

PATLITE ECO PROJECT

For the benefit of mankind and the earth, PATLITE is committed to developing environmentally friendly products.

PATLITE New Frontiers in Safety, Security and Comfort.

www.patlite.com

Courtesy of Steven Engineering, Inc. - (800) 258-9200 - sales@stevenengineering.com - www.stevenengineering.com