SNAP Analog Output Modules

Features

- Resolution = 0.004% of nominal range
- Rugged packaging
- Convenient pluggable wiring
- Powered by a single 5-volt supply
- Factory calibrated; no user adjustment necessary
- Out-of-range indication
- Operating temperature -20 °C to 70 °C
- Accepts up to 22 to 14 AWG wire

Description

SNAP I/O analog output modules are part of Opto 22's SNAP PAC System. They mount on SNAP PAC racks along with other I/O modules and a SNAP PAC brain or R-series controller, either a standard wired or a Wired+Wireless™ model.

These software-configurable output modules handle a wide variety of signal levels. Most provide dual-channel packaging. All SNAP analog modules are factory calibrated. Part numbers ending in -FM are Factory Mutual approved.

SNAP analog output modules have an on-board microprocessor to provide module-level intelligence, which makes them an ideal choice for Original Equipment Manufacturers (OEMs). For additional information about the stand-alone operation of SNAP analog modules, please refer to the *SNAP I/O Module Integration Guide* (Opto 22 form #876).

SNAP racks have a retention rail locking system. Use two 4-40 by ½-inch standard machine screws to hold each module securely in position on the SNAP rack.

Specifications and wiring diagrams are in module descriptions starting on page 2. Dimensional drawings begin on page 13.

Notes for legacy hardware: Most SNAP analog output modules can also be used with legacy SNAP Simple, SNAP Ethernet, and SNAP Ultimate brains and with serial SNAP brains such as the B3000. These modules can be mounted on SNAP B-series or M-series racks. Exceptions are noted in individual module descriptions.

Isolation

All SNAP analog output modules are isolated from all other modules and from the I/O processor (SNAP PAC brain or on-the-rack controller). On most dual-channel modules, the two channels are *not* isolated from each other. Exceptions: SNAP-AOA-23-iSRC, SNAP-AOD-29, and SNAP-AOD-29-HFi have two isolated channels.

SNAP Analog Output Modules

Transformer isolation prevents ground loop currents from flowing between field devices and causing noise that produces erroneous readings. Ground loop currents are caused when two grounded field devices share a connection, and the ground potential at each device is different.

Isolation also provides protection for sensitive control electronics from industrial field signals.

IMPORTANT: Since most SNAP dual-channel analog output modules provide two single-ended output channels with a common reference, these dual channels are transformer and optically isolated from other modules, but not from each other. However, SNAP-AOA-23-iSRC, SNAP-AOD-29, and SNAP-AOD-29-HFi do have channel-to-channel isolation.

Part Numbers

Part	Description	See
SNAP-AOA-23	Dual-channel analog output, current loop, 4–20mA	pg 4
SNAP-AOA-23-iSRC SNAP-AOA-23-iSRC-FM*	Isolated dual-channel analog output, current loop, 4–20 mA, with loop sourcing	pg 5
SNAP-AOA-28	Dual-channel analog output, current loop, 0–20 mA	pg 8
SNAP-AOA-3	Single-channel current output, 4–20mA	pg 2
SNAP-AOD-29	Isolated dual-channel analog time-proportional digital output, 5 to 60 VDC	pg 9
SNAP-AOD-29-HFi	Isolated dual-channel analog TPO or PWM digital output, 2.5 to 24 VDC	pg 10
SNAP-AOV-25	Dual-channel analog voltage output, 0 to 10 VDC	pg 6
SNAP-AOV-27	Dual-channel analog voltage output, -10 to +10 VDC	pg 7
SNAP-AOV-5	Single-channel analog voltage output, 0 to 10 VDC	pg 3
SNAP-AOVA-8	8-channel analog multifunction output, voltage or current	pg 11

* Factory Mutual approved

Opto 22 • 43044 Business Park Drive • Temecula, CA 92590-3614 • **www.opto22.com**
SALES 800-321-6786 • 951-695-3000 • FAX 951-695-3095 • sales@opto22.com • **SUPPORT** 800-835-6786 • 951-695-3080 • FAX 951-695-3017 • support@opto22.com

Single-Channel Current Output 4–20 mA

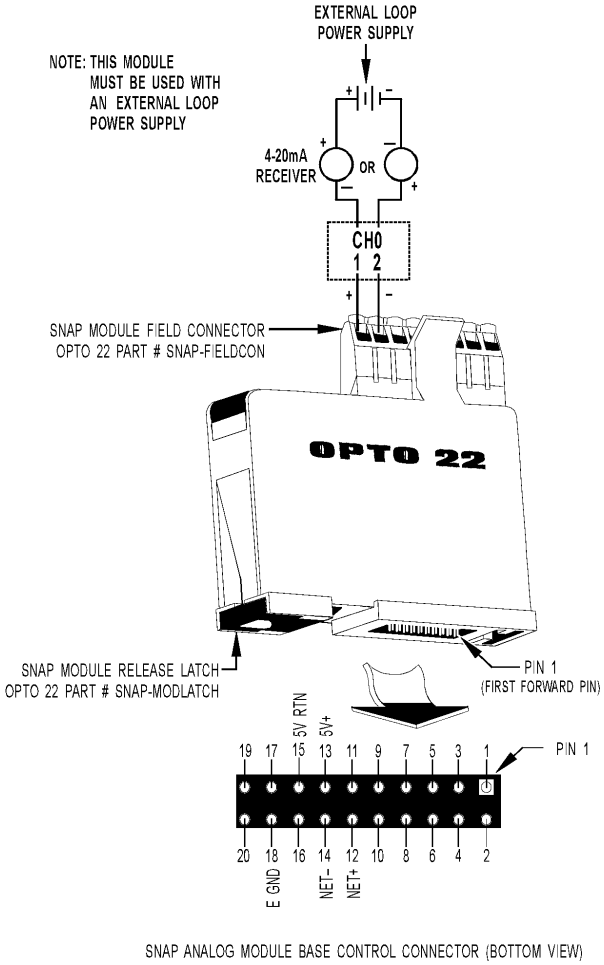

IMPORTANT: The mounting rack connector has 24 pins; the module connector has 20 pins. The extra pins on the mounting rack connector prevent misalignment of the module during installation.

Part Number	Description
SNAP-AOA-3	Single-channel analog output 4–20 mA

Description

The SNAP-AOA-3 module provides a single channel of transformer and optically-isolated digital to analog conversion. The module has a true differential (floating) output that eliminates ground loops and has a nominal output range of 4 mA to 20 mA.

Specifications:

Input	12-bit serial data
Output	4 to 20 mA (floating)
Span	16 mA
Resolution	3.9 microamps
Response Time (% of span/delta I/ delta time)	99.9%/15.98 mA/3 mS
DC Common Mode Rejection	>-120 dB
AC Common Mode Rejection	>-120 dB @ 60 Hz
Maximum Operating Common Mode Voltage	250 V
Common Mode Resistance	>1000 M W
Accuracy	0.1% of span
Gain Temperature Coefficient	50 PPM/ °C
Offset Temperature Coefficient	20 PPM/ °C
Module Power Requirements	5 Volts DC (±0.15) @ 140 mA
Loop Power Requirements	10 Volts DC (min) to 32 Volts DC (max)
Max. Loop Resistance (Ohms) @ Loop Supply	250 350 950 1350 10V 12V 24V 32V
Max. Loop Resistance formula	(Loop Voltage - 5) / 0.02
Ambient Temperature: Operating Storage	-20 °C to 70 °C -40 °C to 85 °C
Torque, hold-down screws	4 in-lb (0.45 N-m)
Torque, connector screws	5.26 in-lb (0.6 N-m)
Wire size range	22 to 14 AWG
Agency Approvals	UL, CE, RoHS, DFARS
Warranty	Lifetime

Opto 22 • 43044 Business Park Drive • Temecula, CA 92590-3614 • **www.opto22.com**
SALES 800-321-6786 • 951-695-3000 • FAX 951-695-3095 • sales@opto22.com • **SUPPORT** 800-835-6786 • 951-695-3080 • FAX 951-695-3017 • support@opto22.com

Single-Channel Voltage Output 0–10 VDC

Part Number	Description
SNAP-AOV-5	Single-channel analog output voltage 0 to 10 VDC

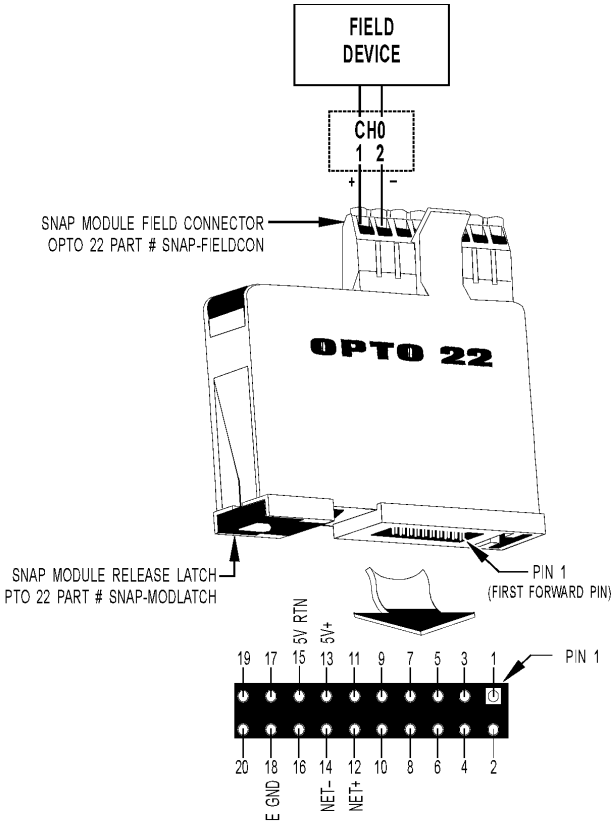

SNAP ANALOG MODULE BASE CONTROL CONNECTOR (BOTTOM VIEW)

IMPORTANT: The mounting rack connector has 24 pins; the module connector has 20 pins. The extra pins on the mounting rack connector prevent misalignment of the module during installation.

Description

The SNAP-AOV-5 module provides a single channel of transformer and optically-isolated digital to analog conversion. The module has a true differential (floating) output that eliminates ground loops and has a nominal output range of 0 VDC to +10 VDC.

Specifications:

Input	12-bit serial data
Output	0 to +10 Volts DC (floating)
Span	10 Volt span
Resolution	2.44 mV
Response Time (% of span/delta V/delta time)	99.9%/19.98 V/3 mS
DC Common Mode Rejection	>-120 dB
AC Common Mode Rejection	>-120 dB @ 60 Hz
Maximum Operating Common Mode Voltage	250 V
Common Mode Resistance	>1000 Megohms
Load Current	10 mA (floating)
Short Circuit Current Continuous	125 mA (typical)
Accuracy	0.1% of span
Gain Temperature Coefficient	50 PPM/°C
Offset Temperature Coefficient	20 PPM/°C
Power Requirements	5 Volts DC @ 150 mA
Ambient Temperature: Operating Storage	 -20 °C to 70 °C -40 °C to 85 °C
Torque, hold-down screws	4 in-lb (0.45 N-m)
Torque, connector screws	5.26 in-lb (0.6 N-m)
Wire size range	22 to 14 AWG
Agency Approvals	UL, CE, RoHS, DFARS
Warranty	Lifetime

Opto 22 • 43044 Business Park Drive • Temecula, CA 92590-3614 • **www.opto22.com**
SALES 800-321-6786 • 951-695-3000 • FAX 951-695-3095 • sales@opto22.com • **SUPPORT** 800-835-6786 • 951-695-3080 • FAX 951-695-3017 • support@opto22.com

Dual-Channel Current Output 4–20 mA

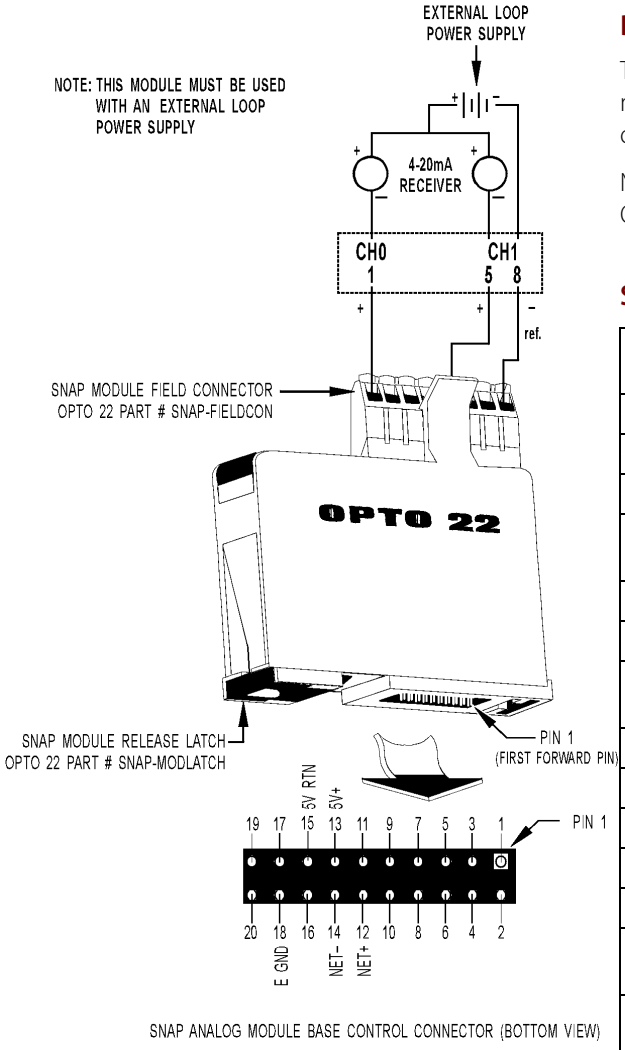

IMPORTANT: The mounting rack connector has 24 pins; the module connector has 20 pins. The extra pins on the mounting rack connector prevent misalignment of the module during installation.

Part Number	Description
SNAP-AOA-23	Dual-channel analog output current loop 4–20 mA

Description

The SNAP-AOA-23 module provides a nominal output range of 4 mA to 20 mA. An external loop power source is required for the current loops.

NOTE: Both channels share common reference terminals. Common reference terminals are 3, 4, 7, and 8.

Specifications:

Input	12-bit serial data (each channel)
Outputs	4 to 20 mA (each channel)
Span	16 mA
Resolution	3.9 microamps
Response Time (% of span/delta I/ delta time)	99.9%/15.98 mA/3 mS
DC Common Mode Rejection	>-120 dB
AC Common Mode Rejection	>-120 dB @ 60 Hz
Maximum Operating Common Mode Voltage	250 V
Common Mode Resistance	>1000 Megohms
Accuracy	0.1% of Span
Gain Temperature Coefficient	50 PPM/°C
Offset Temperature Coefficient	20 PPM/°C
Module Power Requirements	5 Volts DC (±0.15) @ 150 mA
Loop Power Requirements	8 VDC (min) to 32 Volts DC (max)
Max. Loop Resistance (Ohms) @ Loop Supply	250 450 650 1050 1450 8V 12V 15V 24V 32V
Max. Loop Resistance formula	$\frac{\text{(Loop Voltage - 3)}}{0.02}$
Ambient Temperature: Operating Storage	-20 °C to 70 °C -40 °C to 85 °C
Torque, hold-down screws	4 in-lb (0.45 N-m)
Torque, connector screws	5.26 in-lb (0.6 N-m)
Wire size range	22 to 14 AWG
Agency Approvals	UL, CE, FM, RoHS, DFARS
Warranty	Lifetime

Opto 22 • 43044 Business Park Drive • Temecula, CA 92590-3614 • **www.opto22.com**
SALES 800-321-6786 • 951-695-3000 • FAX 951-695-3095 • sales@opto22.com • **SUPPORT** 800-835-6786 • 951-695-3080 • FAX 951-695-3017 • support@opto22.com

SNAP Analog Output Modules

Isolated Dual-Channel Current Output 4–20 mA

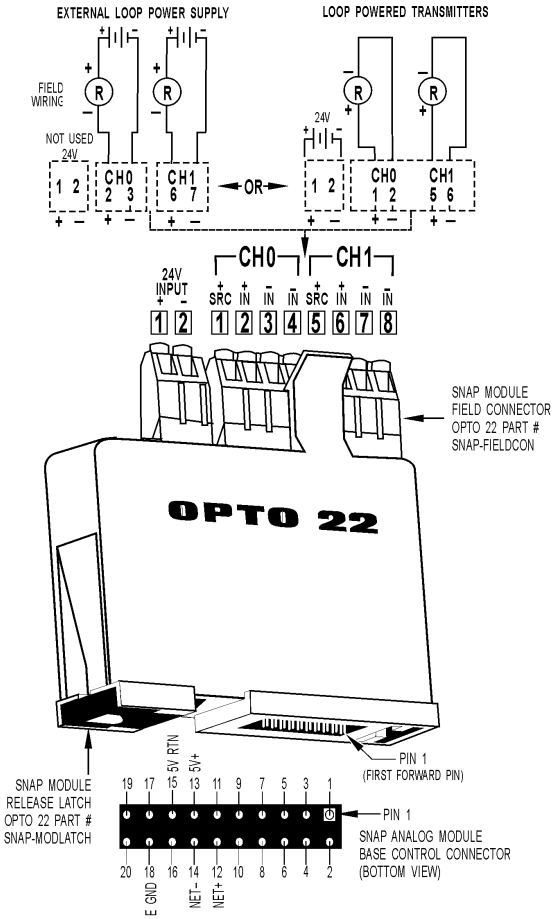

IMPORTANT: The mounting rack connector has 24 pins; the module connector has 20 pins. The extra pins on the mounting rack connector prevent misalignment of the module during installation.

Description

The SNAP-AOA-23-iSRC and SNAP-AOA-23-iSRC-FM modules provide a nominal output range of 4 mA to 20 mA. These modules include built-in loop sourcing capability. The SNAP-AOA-23-iSRC-FM is Factory Mutual approved.

With the connection of a single 24 V power supply, these modules source two 24 V loops. The loop sources are internally connected to the individual outputs.

The two channels and their loop sources are isolated from each other; they do not share any field connection. In addition, each loop source is current limited so that an external fault on one loop will not affect the other.

Part Number	Description
SNAP-AOA-23-iSRC SNAP-AOA-23-iSRC-FM	Isolated dual-channel analog 4–20 mA output with loop sourcing

Specifications:

Input	12-bit serial data (each channel)
Outputs	4 to 20 mA (each channel)
Span	16 mA
Resolution	3.9 microamps
Response Time (% of span/delta I/ delta time)	99.9%/15.98 mA/3 mS
DC Common Mode Rejection	>-120 dB
AC Common Mode Rejection	>-120 dB @ 60 Hz
Maximum Operating Common Mode Voltage	250 V
Common Mode Resistance	>1000 Megohms
Accuracy	0.1% of Span
Gain Temperature Coefficient	50 PPM/°C
Offset Temperature Coefficient	20 PPM/°C
Max. Loop Resistance @ Loop Supply	950 Ohms
Ambient Temperature: Operating Storage	 -20 °C to 70 °C -40 °C to 85 °C
Isolation: Optical	4000 V
Isolation: Transformer	1500 V
Isolation: Channel to Channel	250 V continuous (1500 V transient)
Power Requirements	5 Volts DC (±0.15) @ 200 mA
Power Requirements - Loop Power (Input)	From separate field connector; 24 VDC nominal (70 mA max) @ 24 V input, both loops @ 20 mA), 30 VDC maximum
Loop Power (Output)	24 VDC (±1.5 V) @ 20 mA Open loop: 30 V maximum Shorted loop: 24 mA nominal
LED on top of module	Indicates that there is power to the 24v source supply 2-pin connector
Agency Approvals	CE, RoHS, DFARS FM, ATEX (SNAP-AOA-23-iSRC-FM only)
Torque, hold-down screws	4 in-lb (0.45 N-m)
Torque, connector screws	5.26 in-lb (0.6 N-m)
Wire size range	22 to 14 AWG
Warranty	Lifetime

Dual-Channel Voltage Output 0–10 VDC

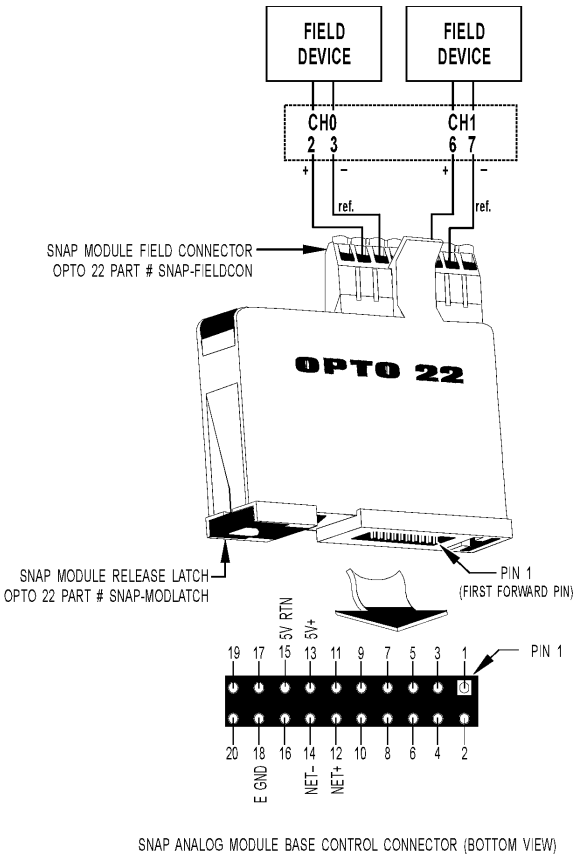

IMPORTANT: The mounting rack connector has 24 pins; the module connector has 20 pins. The extra pins on the mounting rack connector prevent misalignment of the module during installation.

Part Number	Description
SNAP-AOV-25	Dual-channel analog output voltage 0 to 10 VDC

Description

The SNAP-AOV-25 module provides a nominal output range of 0 to +10 volts. Each channel can supply +5 mA of load current.

NOTE: Both channels share a common reference terminal.

Specifications:

Input	12-bit serial data (each channel)
Outputs	0 to +10 Volts DC
Span	10 Volts
Resolution	2.44 mV
Response Time (% of span/delta V/delta time)	99.9%/19.98 V/3 mS
DC Common Mode Rejection	>-120 dB
AC Common Mode Rejection	>-120 dB @ 60 Hz
Maximum Operating Common Mode Voltage	250 V
Common Mode Resistance	>1,000 Megohms
Load Current (nominal)	5 mA (each channel)
Short Circuit Output Current Continuous	40 mA per channel
Accuracy	0.1% of Span
Gain Temperature Coefficient	50 PPM/°C
Offset Temperature Coefficient	20 PPM/°C
Power Requirements	5 Volts DC (±0.15) @ 150 mA
Ambient Temperature: Operating Storage	 -20 °C to 70 °C -40 °C to 85 °C
Torque, hold-down screws	4 in-lb (0.45 N-m)
Torque, connector screws	5.26 in-lb (0.6 N-m)
Wire size range	22 to 14 AWG
Agency Approvals	UL, CE, FM, RoHS, DFARS
Warranty	Lifetime

Opto 22 • 43044 Business Park Drive • Temecula, CA 92590-3614 • **www.opto22.com**
SALES 800-321-6786 • 951-695-3000 • FAX 951-695-3095 • sales@opto22.com • **SUPPORT** 800-835-6786 • 951-695-3080 • FAX 951-695-3017 • support@opto22.com

Dual-Channel Voltage Output -10 to +10 VDC

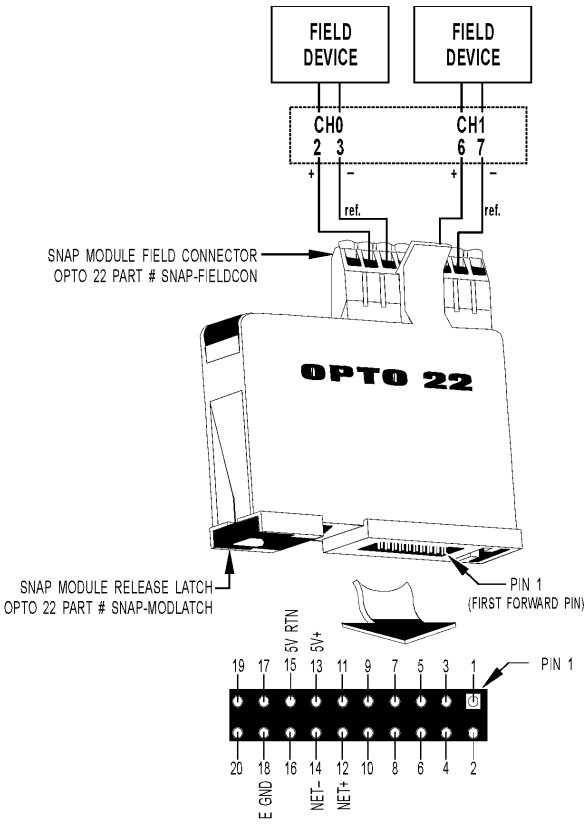

SNAP ANALOG MODULE BASE CONTROL CONNECTOR (BOTTOM VIEW)

IMPORTANT: The mounting rack connector has 24 pins; the module connector has 20 pins. The extra pins on the mounting rack connector prevent misalignment of the module during installation.

Part Number	Description
SNAP-AOV-27	Dual-channel analog voltage output -10 VDC to +10 VDC

Description

The SNAP-AOV-27 module provides a nominal output range of -10 to +10 volts. Each channel can supply ±5 mA of load current.

NOTE: Both channels share a common reference terminal.

Specifications:

Input	12-bit serial data (each channel)
Outputs	-10 to +10 Volts DC
Span	20 Volts
Resolution	4.88 mV
Response Time (% of span/delta V/delta time)	99.9%/19.98 V/3 mS
DC Common Mode Rejection	>-120 dB
AC Common Mode Rejection	>-120 dB @ 60 Hz
Maximum Operating Common Mode Voltage	250 V
Common Mode Resistance	>1,000 Megohms
Load Current (nominal)	5 mA (each channel)
Short Circuit Output Current Continuous	40 mA per channel
Accuracy	0.1% of Span
Gain Temperature Coefficient	50 PPM/°C
Offset Temperature Coefficient	20 PPM/°C
Power Requirements	5 Volts DC (±0.15) @ 150 mA
Ambient Temperature: Operating Storage	 -20 °C to 70 °C -40 °C to 85 °C
Torque, hold-down screws	4 in-lb (0.45 N-m)
Torque, connector screws	5.26 in-lb (0.6 N-m)
Wire size range	22 to 14 AWG
Agency Approvals	UL, CE, FM, RoHS, DFARS
Warranty	Lifetime

Opto 22 • 43044 Business Park Drive • Temecula, CA 92590-3614 • **www.opto22.com**
SALES 800-321-6786 • 951-695-3000 • FAX 951-695-3095 • sales@opto22.com • **SUPPORT** 800-835-6786 • 951-695-3080 • FAX 951-695-3017 • support@opto22.com

Dual-Channel Current Output 0–20 mA

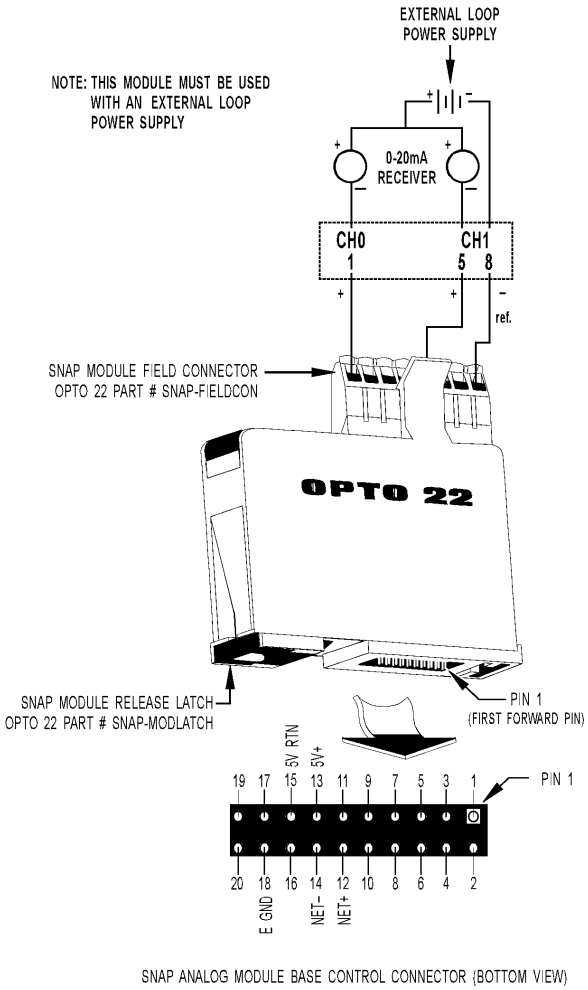

IMPORTANT: The mounting rack connector has 24 pins; the module connector has 20 pins. The extra pins on the mounting rack connector prevent misalignment of the module during installation.

Part Number	Description
SNAP-AOA-28	Dual-channel analog output current loop 0–20 mA

Description

The SNAP-AOA-28 module provides a nominal output range of 0 mA to 20 mA. An external loop power source is required for the current loops.

NOTE: Both channels share a common reference terminal.

Specifications:

Input	12-bit serial data (each channel)
Outputs	0 to 20 mA (each channel)
Span	20 mA
Resolution	4.9 microamps
Response Time (% of span/delta I/ delta time)	99.9%/15.98 mA/3 mS
DC Common Mode Rejection	>-120 dB
AC Common Mode Rejection	>-120 dB @ 60 Hz
Maximum Operating Common Mode Voltage	250 V
Common Mode Resistance	>1000 Megohms
Accuracy	0.1% of Span
Gain Temperature Coefficient	50 PPM/°C
Offset Temperature Coefficient	20 PPM/°C
Module Power Requirements	5 Volts DC (±0.15) @ 150 mA
Loop Power Requirements	8 Volts DC (min) to 32 Volts DC (max)
Max. Loop Resistance (Ohms) @ Loop Supply	250 8V; 450 8V; 650 12V; 1050 24V; 1450 32V
Max. Loop Resistance formula	$\frac{\text{(Loop Voltage - 5)}}{0.02}$
Ambient Temperature: Operating Storage	-20 °C to 70 °C; -40 °C to 85 °C
Torque, hold-down screws	4 in-lb (0.45 N-m)
Torque, connector screws	5.26 in-lb (0.6 N-m)
Wire size range	22 to 14 AWG
Agency Approvals	UL, CE, ATEX, FM, RoHS, DFARS
Warranty	Lifetime

Opto 22 • 43044 Business Park Drive • Temecula, CA 92590-3614 • **www.opto22.com**
SALES 800-321-6786 • 951-695-3000 • FAX 951-695-3095 • sales@opto22.com • **SUPPORT** 800-835-6786 • 951-695-3080 • FAX 951-695-3017 • support@opto22.com

Dual-Channel Time-Proportional Output Voltage 5–60 VDC

Part Number	Description
SNAP-AOD-29	Isolated dual-channel analog Time-proportional digital output 5 to 60 VDC

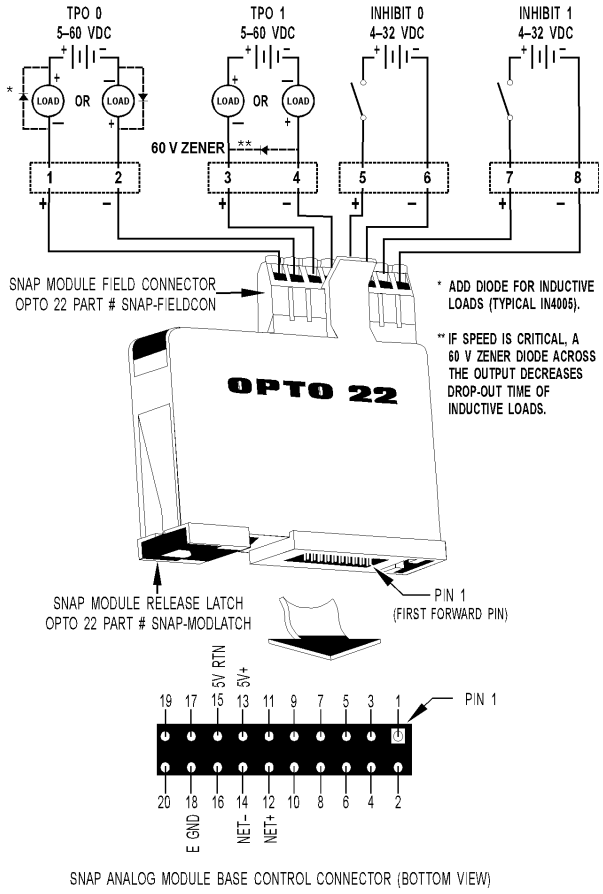

IMPORTANT: The mounting rack connector has 24 pins; the module connector has 20 pins. The extra pins on the mounting rack connector prevent misalignment of the module during installation.

Description

The SNAP-AOD-29 module provides two channels of time-proportional output (TPO). The outputs are used to switch or control DC loads such as lamps or indicators, solenoids, relay coils, and PLC logic. Each TPO channel can switch 0.5 A of load current ranging from 5 VDC to 60 VDC, over a period range of .25 seconds to 64.25 seconds.

Both TPO channels also have individual "inhibit" inputs dedicated to turning off the output, a useful feature in temperature and interlock control applications. The channels are optically isolated from each other.

NOTE: The SNAP-AOD-29 module cannot be used in a SNAP PAC IO4AB system. Instead, use the built-in TPO functionality available on all SNAP-PAC brains that support IO4AB.

Specifications:

Input	12-bit serial data (each channel)
Switched Output at 45 °C Ambient at 70 °C Ambient	5 to 60 Volts DC 0.5 A 0.2 A
TPO Resolution	12-bit Each bit = Period/4095 1 millisecond/bit default
Period Range	0.251 sec. to 64.25 sec. (0.251 sec for Ethernet-based I/O units) 0.251 seconds module default
Period Accuracy	± 0.5%
Period Resolution	.251 second
Inhibit Inputs On Off	 4.0 Volts DC at 1.0 mA (32 Volts DC max. 1.0 Volt DC
Maximum Operating Common Mode Voltage	250 V
Common Mode Resistance	>1,000 Megohms
Timebase Temperature Coefficient	50 PPM/°C
Power Requirements	5 Volts DC (±0.15) @ 150 mA
Ambient Temperature: Operating Storage	 -20 °C to 70 °C -40 °C to 85 °C
Torque, hold-down screws	4 in-lb (0.45 N-m)
Torque, connector screws	5.26 in-lb (0.6 N-m)
Wire size range	22 to 14 AWG
Agency Approvals	UL, FM, CE, RoHS, DFARS
Warranty	Lifetime

Opto 22 • 43044 Business Park Drive • Temecula, CA 92590-3614 • **www.opto22.com**
SALES 800-321-6786 • 951-695-3000 • FAX 951-695-3095 • sales@opto22.com • **SUPPORT** 800-835-6786 • 951-695-3080 • FAX 951-695-3017 • support@opto22.com

Dual-Channel Time-Proportional Output Voltage 2.5–24 VDC, 0 to 100 kHz

Part Number	Description
SNAP-AOD-29-HFi	Isolated dual-channel analog time-proportional or pulse-width modulation digital output, 2.5 to 24 VDC

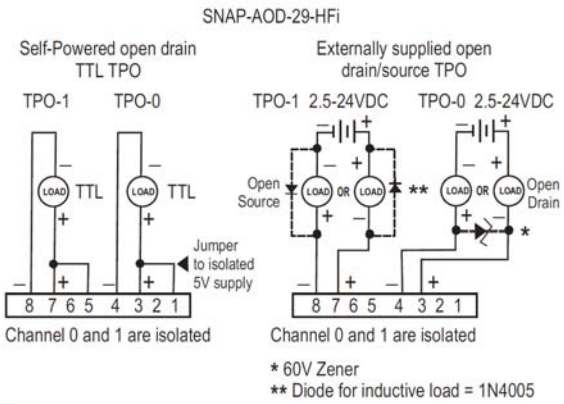

WARNING: Do not remove or replace connectors or cards while circuit is live unless area is known to be nonhazardous.

Description

The SNAP-AOD-29-HFi is a TPO (time-proportional output) or PWM (pulse-width modulation) module that converts an analog value to a digital on/off output. The outputs are used to switch or control DC loads such as lamps or indicators, solenoids, relay coils, and PLC logic. Each channel can switch 100 mA of load current ranging from 2.5 VDC to 24 VDC supplied externally, over a period range of 0.00001 seconds to 64.25 seconds.

The two channels are optically isolated from each other.

Five volts through a 200 Ohm pull-up resistor are provided internally for each channel for use with TTL loads. This feature means you don't have to provide the pull-up voltage supply required for each output.

This module requires a SNAP PAC controller or brain with SNAP PAC firmware version 9.3c or higher. It cannot be used with legacy controllers or brains.

NOTE: The SNAP-AOD-29-HFi module cannot be used in a SNAP PAC IO4AB system. Instead, use the built-in TPO functionality available on all SNAP-PAC brains that support IO4AB.

Specifications

Switched Output	2.5 to 24 VDC at 100 mA supplied externally
Maximum Survivable Switch Voltage	60 VDC
Peak Current	1.0 A (t < 10 milliseconds)
Period Range	0.00001 sec to 64.25 sec
Percent Range	0-100%
Period Resolution	20.8 nanoseconds
Percent Resolution	0.024% (12-bit)
Period Accuracy	+- 0.005% of period
Pull-up Voltage	4.5 to 5.0 VDC
Pull-up Resistor	200 Ohm
Minimum Output Pulse Width	1 microsecond
Maximum Operating Common Mode Voltage	250 V Continuous
Isolation: Channel to Channel	250V Continuous 1500V Transient
Power Consumption	1.5 W (300 mA @ 5 V)
Ambient Temperature: Operating Storage	 -20 °C to 70 °C -40 °C to 85 °C
Torque, hold-down screws	4 in-lb (0.45 N-m)
Torque, connector screws	5.26 in-lb (0.6 N-m)
Wire size range	22 to 14 AWG
Agency Approvals	CE, RoHS, DFARS
Warranty	Lifetime

Opto 22 • 43044 Business Park Drive • Temecula, CA 92590-3614 • **www.opto22.com**
SALES 800-321-6786 • 951-695-3000 • FAX 951-695-3095 • sales@opto22.com • **SUPPORT** 800-835-6786 • 951-695-3080 • FAX 951-695-3017 • support@opto22.com

8-Channel Multifunction Voltage/ Current Output

The SNAP-AOVA-8 is an analog output module with 8 channels, individually configurable for any one of six voltage or current output ranges:

Voltage	Self-sourcing Current
0 to 5 VDC 0 to 10 VDC -5 to +5 VDC -10 to +10 VDC	4 to 20 mA 0 to 20 mA

Each range has 4096 counts (12 bits) of resolution.

The SNAP-AOVA-8 requires a 24 VDC excitation voltage brought in through the field connector on the top of the module. This voltage is internally isolated with transformer and digital data isolators, and then used to source all channels.

Because all current is sourced from within the module using the 24 VDC excitation, current outputs are self-sourcing and cannot be used with an external loop supply or in loops that are loop-powered or have a self-sourcing device in the loop.

Each channel is individually current or voltage limited and not affected by opens or shorts on adjacent channels. Connect both wires from the module, so that a change in output on one channel will not affect another channel.

Specifications

Excitation Range	18 TO 32 VDC
Excitation Current Required	200mA @ 32VDC, 250mA @ 24VDC, 350mA @ 18VDC
24V Excitation Fault Recovery Time	15 mS nominal
Power Requirement (from the rack)	5 VDC (±0.15) @ 150 mA
Maximum Operating Common Mode Voltage	250 volts
Isolation	1500 V (transient)
DC Common Mode Rejection	>-120 dB
AC Common Mode Rejection	>-120 dB @ 60 Hz
Data Refresh Time	9 mS nom (update 1 ch/ms)
Ambient Temperature: Operating Storage	 -20 to 70 °C -40 °C to 85 °C
Torque, hold-down screws	4 in-lb (0.45 N-m)
Torque, connector screws	5.26 in-lb (0.6 N-m)
Wire size range	22 to 14 AWG
Agency Approvals	UL, CE, RoHS, DFARS
Warranty	Lifetime

Part Number	Description
SNAP-AOVA-8	8-channel analog multifunction output, voltage or current
SNAP-HD-20F6	6 ft. (1.8 m) wiring cable for SNAP-AOVA-8 module, with flying leads (required)

All negative output terminals on the module are tied together internally. To prevent ground loops, use loads with isolated signal inputs or use devices with the same power source, so they have a common ground.

To wire the module, a 6-foot-long SNAP-HD-20F6 cable is required. The cable has a 20-pin connector at the module end and flying leads for wiring to field devices. See wiring information on page 12.

You can also use a SNAP-TEX-32 breakout board for wiring convenience. See form 1756, the *SNAP TEX Cables & Breakout Boards Data Sheet*, for more information.

The SNAP-AOVA-8 requires a SNAP PAC brain or rack-mounted controller with firmware version R9.4b or higher. It cannot be used with legacy controllers or brains.

Specifications (continued)

Voltage Outputs	
Output Range (Resolution)	0 to 5 VDC (1.22 mV) 0 to 10 VDC (2.44 mV) -5 to +5 VDC (2.44 mV) -10 to +10 VDC (4.88 mV)
Load Current	+/-10 mA min. each voltage output channel)
Short Circuit Current	16 mA Typ.
Accuracy	0.1% of span
Drift: Gain Temperature Coefficient Offset Temperature Coefficient	 30 PPM / °C 15 PPM / °C
Current Outputs	
Output Range (Resolution)	4 to 20 mA (4 microamps) 0 to 20 mA (5 microamps)
Maximum Loop Resistance	750 Ohms (each current output channel)
Open Circuit Volts	27 VDC max. (24 VDC typical)
Accuracy	0.1% of span
Drift: Gain Temperature Coefficient Offset Temperature Coefficient	 30 PPM / °C 15 PPM / °C

8-Channel Multifunction Voltage/Current Output (continued)

Wiring

SNAP-AOVA-8 Module (from top)

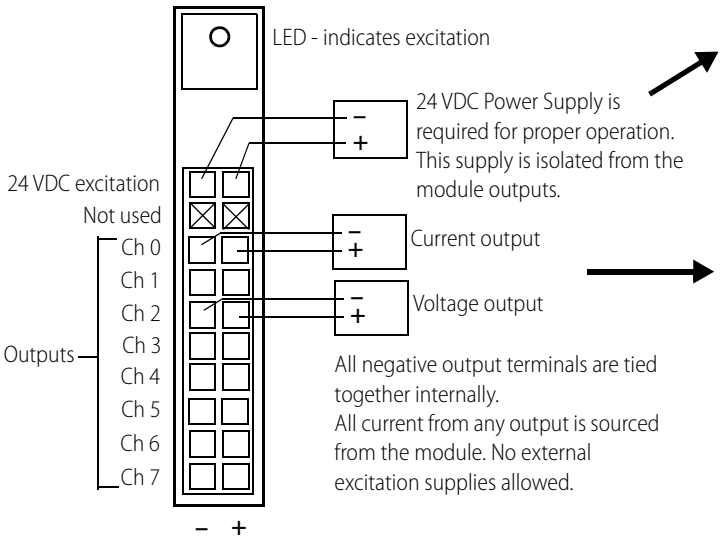

SNAP-HD-20F6 Cable

For more information on the SNAP-HD-20F6 cable, see form 1756, the *SNAP TEX Cables & Breakout Boards Data Sheet.*

Wire colors - Excitation

24 VDC	Color
–	Black
+	White with Black

Wire colors - Output points

Ch	–/+	Color
0	–	Blue
	+	White with Blue
1	–	Pink
	+	White with Pink
2	–	Gray
	+	White with Gray
3	–	Green
	+	White with Green
4	–	Orange
	+	White with Orange
5	–	Red
	+	White with Red
6	–	Purple
	+	White with Purple
7	–	Yellow
	+	White with Yellow

NOTE: Yellow with purple and purple with yellow wires are not used.

Opto 22 • 43044 Business Park Drive • Temecula, CA 92590-3614 • **www.opto22.com**
SALES 800-321-6786 • 951-695-3000 • FAX 951-695-3095 • sales@opto22.com • **SUPPORT** 800-835-6786 • 951-695-3080 • FAX 951-695-3017 • support@opto22.com

SNAP Analog Output Modules

Dimensional Drawings

All Modules except SNAP-AOA-23-iSRC, SNAP-AOA-23-iSRC-FM, and SNAP-AOVA-8

Note: The SNAP-AOD-29 time-proportional output (TPO) module has integral LEDs for monitoring and troubleshooting the module's outputs and inhibit inputs.

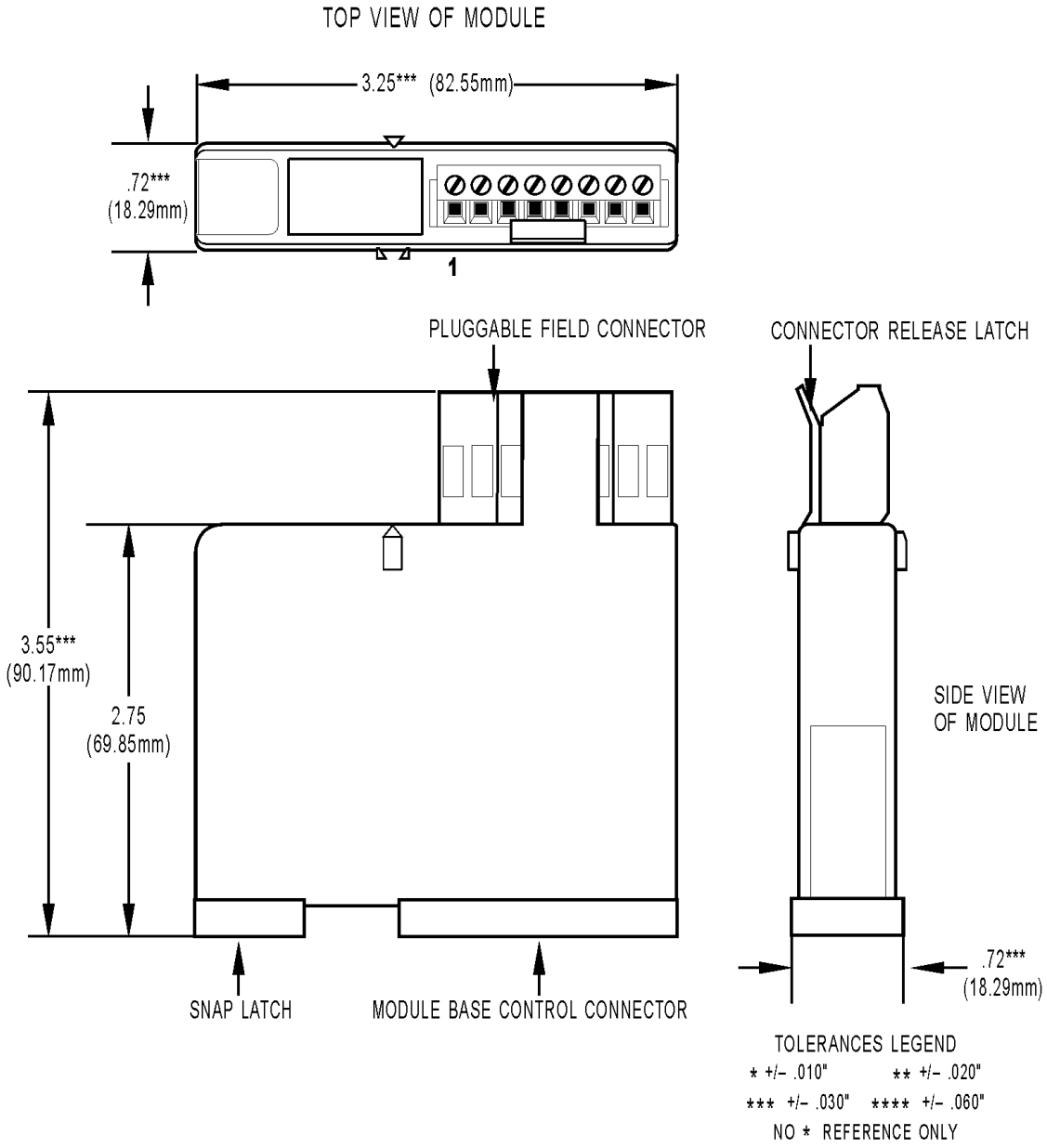

Opto 22 • 43044 Business Park Drive • Temecula, CA 92590-3614 • **www.opto22.com**
SALES 800-321-6786 • 951-695-3000 • FAX 951-695-3095 • sales@opto22.com • **SUPPORT** 800-835-6786 • 951-695-3080 • FAX 951-695-3017 • support@opto22.com

Dimensional Drawings

SNAP-AOA-23-iSRC and SNAP-AOA-23-iSRC-FM only

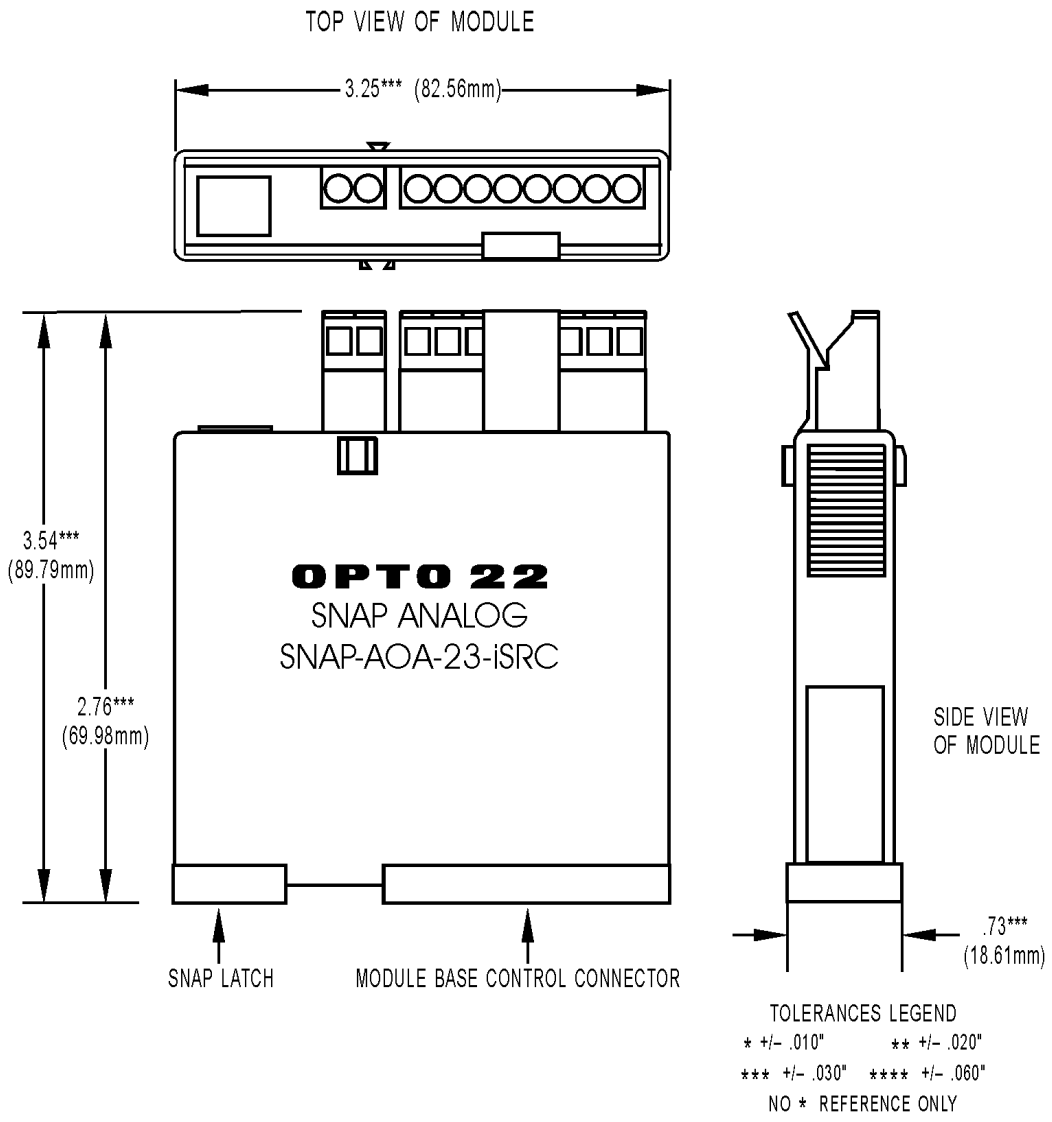

Opto 22 • 43044 Business Park Drive • Temecula, CA 92590-3614 • **www.opto22.com**
SALES 800-321-6786 • 951-695-3000 • FAX 951-695-3095 • sales@opto22.com • **SUPPORT** 800-835-6786 • 951-695-3080 • FAX 951-695-3017 • support@opto22.com

SNAP Analog Output Modules

Dimensional Drawings

SNAP-AOVA-8 only

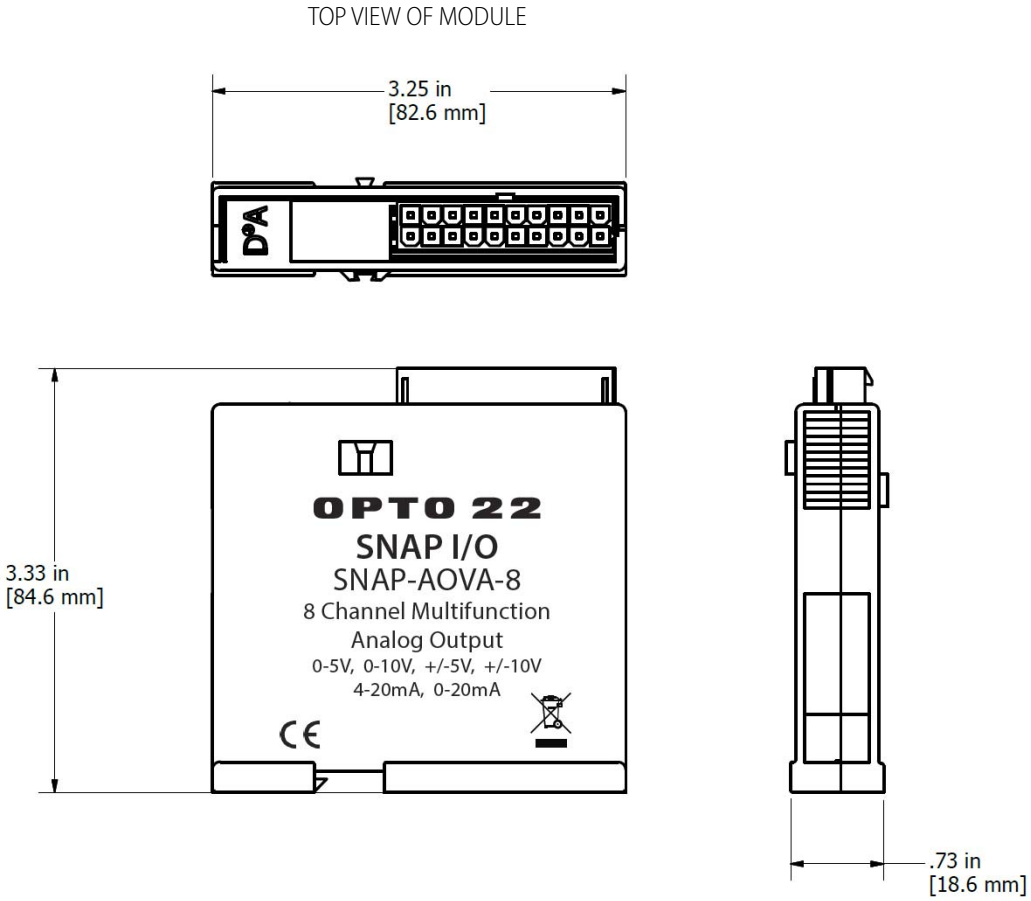

Opto 22 • 43044 Business Park Drive • Temecula, CA 92590-3614 • **www.opto22.com**
SALES 800-321-6786 • 951-695-3000 • FAX 951-695-3095 • sales@opto22.com • **SUPPORT** 800-835-6786 • 951-695-3080 • FAX 951-695-3017 • support@opto22.com

Dimensional Drawings

All Modules

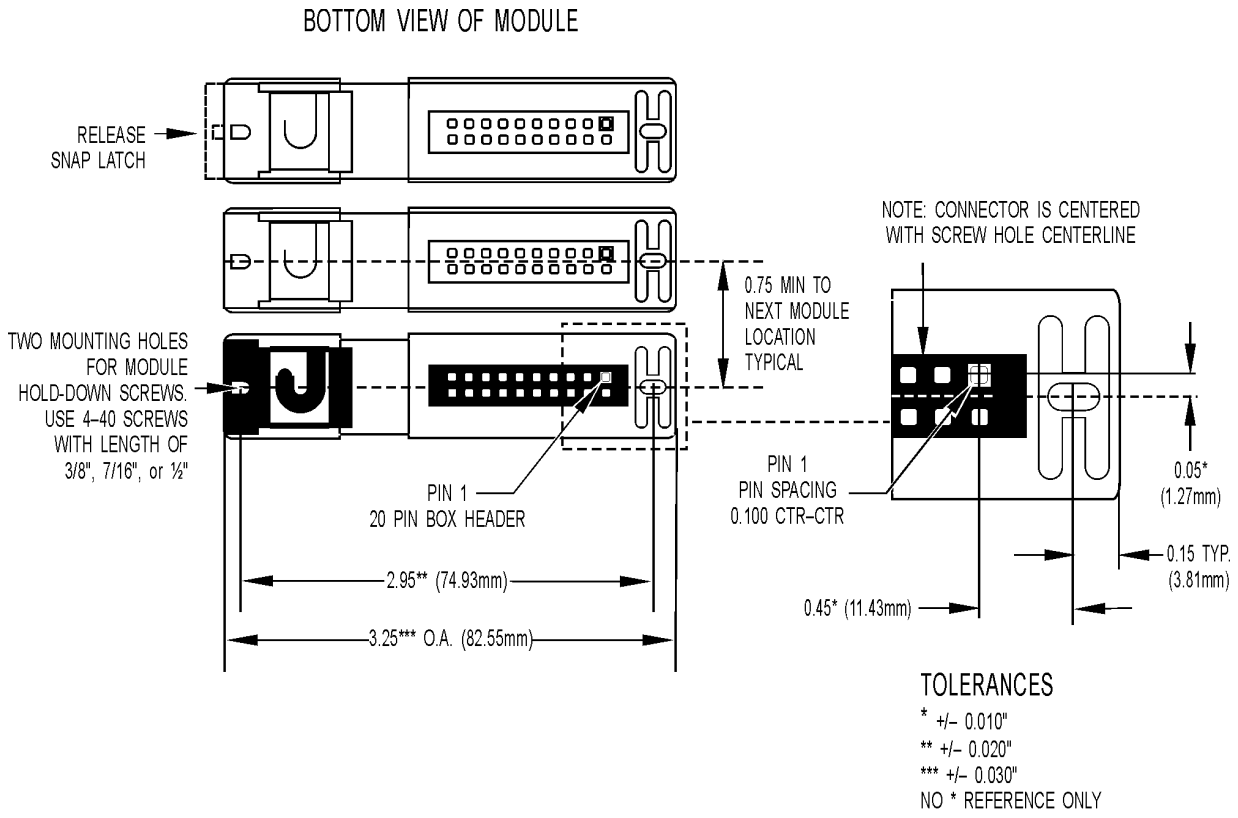

IMPORTANT: The mounting rack connector has 24 pins; the module connector has 20 pins. The extra pins on the mounting rack connector prevent misalignment of the module during installation.

Opto 22 • 43044 Business Park Drive • Temecula, CA 92590-3614 • **www.opto22.com**
SALES 800-321-6786 • 951-695-3000 • FAX 951-695-3095 • sales@opto22.com • **SUPPORT** 800-835-6786 • 951-695-3080 • FAX 951-695-3017 • support@opto22.com

SNAP Analog Output Modules

Dimensional Drawing

All Modules

SNAP Analog Module Mounted on a SNAP Rack

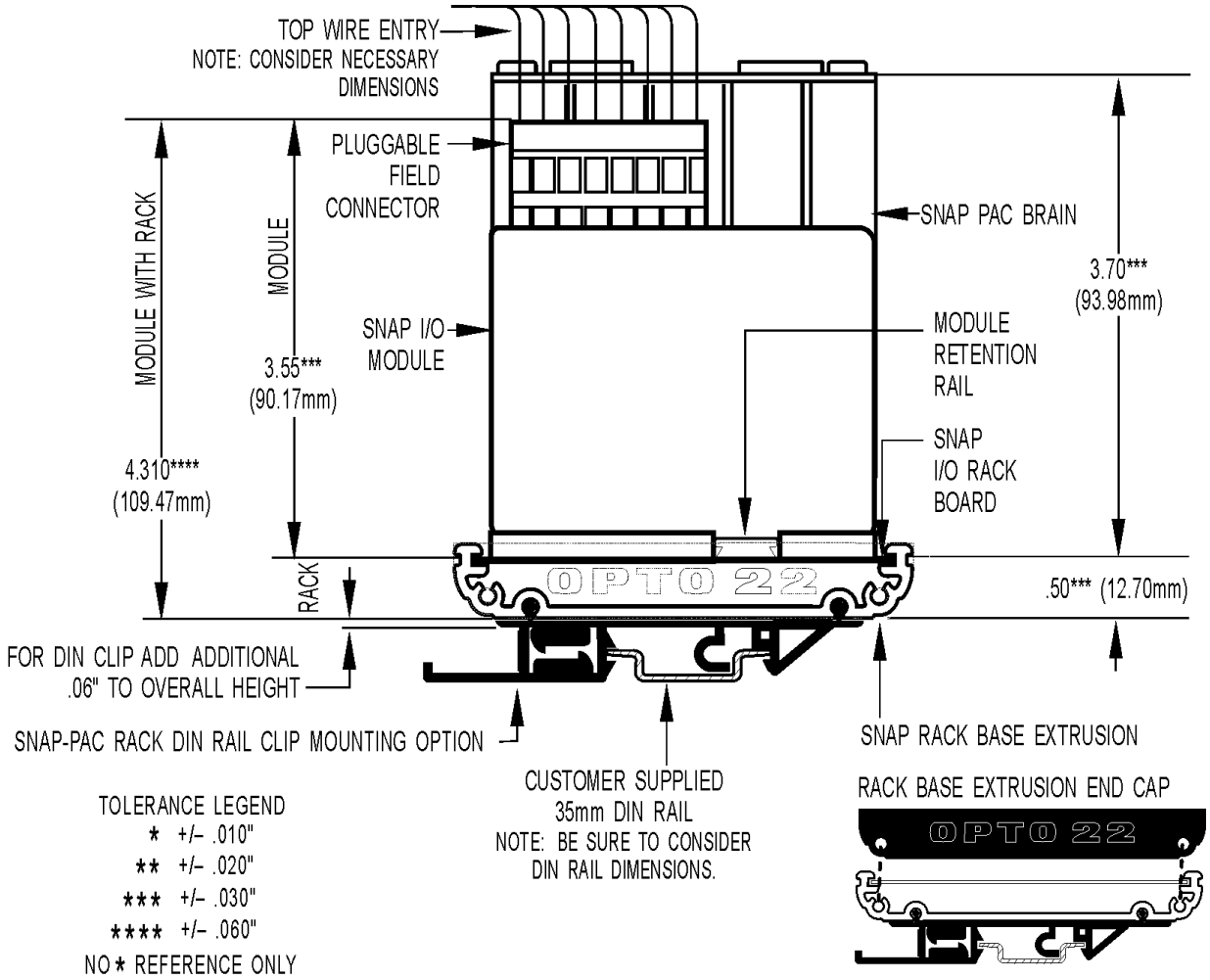

Opto 22 • 43044 Business Park Drive • Temecula, CA 92590-3614 • **www.opto22.com**
SALES 800-321-6786 • 951-695-3000 • FAX 951-695-3095 • sales@opto22.com • **SUPPORT** 800-835-6786 • 951-695-3080 • FAX 951-695-3017 • support@opto22.com

More about Opto 22

OPTO 22

PRODUCTS

Opto 22 develops and manufactures reliable, easy-to-use, open standards-based hardware and software products used worldwide.

Industrial automation, process control, building automation, industrial refrigeration, remote monitoring, data acquisition, and Industrial Internet of Things (IIoT) applications all rely on Opto 22.

groov

Monitor and control your equipment from anywhere using your smartphone or tablet with groov. Build your own mobile app easily—just drag, drop, and tag. No programming or coding. Visit groov.com for more information and your free trial.

SNAP PAC System

Developer- and IIoT-ready, the SNAP PAC System connects physical assets to databases and applications using open standards. The SNAP PAC System consists of four integrated components:

- SNAP PAC controllers
- PAC Project™ Software Suite
- SNAP PAC brains
- SNAP I/O™

SNAP PAC Controllers

SNAP PAC programmable automation controllers handle a wide range of digital, analog, and serial functions for data collection, remote monitoring, process control, and discrete and hybrid manufacturing.

For IIoT applications and easier integration with company systems, standalone and rack-mounted SNAP PACs include a built-in HTTP/HTTPS server and **RESTful API** (application program interface). The REST API gives you secure, direct access to I/O and variable data using your choice of programming languages. No middleware, protocol converters, drivers, or gateways needed.

Based on open Ethernet and Internet Protocol (IP) standards, SNAP PACs make it easier to build or extend a system without the expense and limitations of proprietary networks and protocols.

PAC Project Software Suite

Opto 22's PAC Project Software Suite offers full-featured, cost-effective control programming, HMI (human machine interface), OPC server, and database connectivity software.

Control programming includes both easy-to-learn flowcharts and optional scripting. Commands are in plain English; variables and I/O point names are fully descriptive.

PAC Project Basic offers control and HMI tools and is free for download on our website, www.opto22.com. PAC Project Professional, available for separate purchase, adds one SoftPAC software-based controller, OptoOPCServer, OptoDataLink, options for controller redundancy or segmented networking, and support for legacy Opto 22 serial *mistic*™ I/O units.

SNAP PAC Brains

While SNAP PAC controllers provide central control and data distribution, SNAP PAC brains provide distributed intelligence for I/O processing and communications. Brains offer analog, digital, and serial functions, including thermocouple linearization, local PID loop control, watchdog, totalizing, and much more.

SNAP I/O

I/O provides the local connection to sensors and equipment. Opto 22 SNAP I/O offers 1 to 32 points of reliable I/O per module. Analog, digital, and serial modules are mixed on one mounting rack and controlled by a SNAP PAC brain or rack-mounted PAC.

QUALITY

Founded in 1974, Opto 22 has established a worldwide reputation for high-quality products. All are made in the U.S.A. at our manufacturing facility in Temecula, California.

Because we test each product twice before it leaves our factory, rather than only testing a sample of each batch, we can guarantee most solid-state relays and optically isolated I/O modules for life.

FREE PRODUCT SUPPORT

Opto 22's California-based Product Support Group offers free, comprehensive technical support for Opto 22 products from engineers with decades of training and experience. Support is available in English and Spanish by phone or email, Monday–Friday, 7 a.m. to 5 p.m. PST.

Support is always available on our website: how-to videos, user's guides, OptoKnowledgeBase, self-training guide, troubleshooting, and OptoForums. In addition, hands-on training is available for free at our Temecula, California headquarters, and you can register online.

PURCHASING OPTO 22 PRODUCTS

Opto 22 products are sold directly and through a worldwide network of distributors, partners, and system integrators. For more information, contact Opto 22 headquarters at 800-321-6786 (toll-free in the U.S. and Canada) or 951-695-3000, or visit our website at www.opto22.com.

OPTO 22 • www.opto22.com
43044 Business Park Dr. Temecula, CA 92590-3614

SALES • sales@opto22.com
800-321-6786 • 1-951-695-3000

SUPPORT • support@opto22.com
800-835-6786 • 1-951-695-3080

MADE IN THE USA

Form 1335-170413