SMC Pneumatic Clean Series

Particle generation level of SMC pneumatic clean series equipment can be classified into 1-4 grades by the particle generation measurement test, and each equipment can be used according to the clean room cleanliness class.

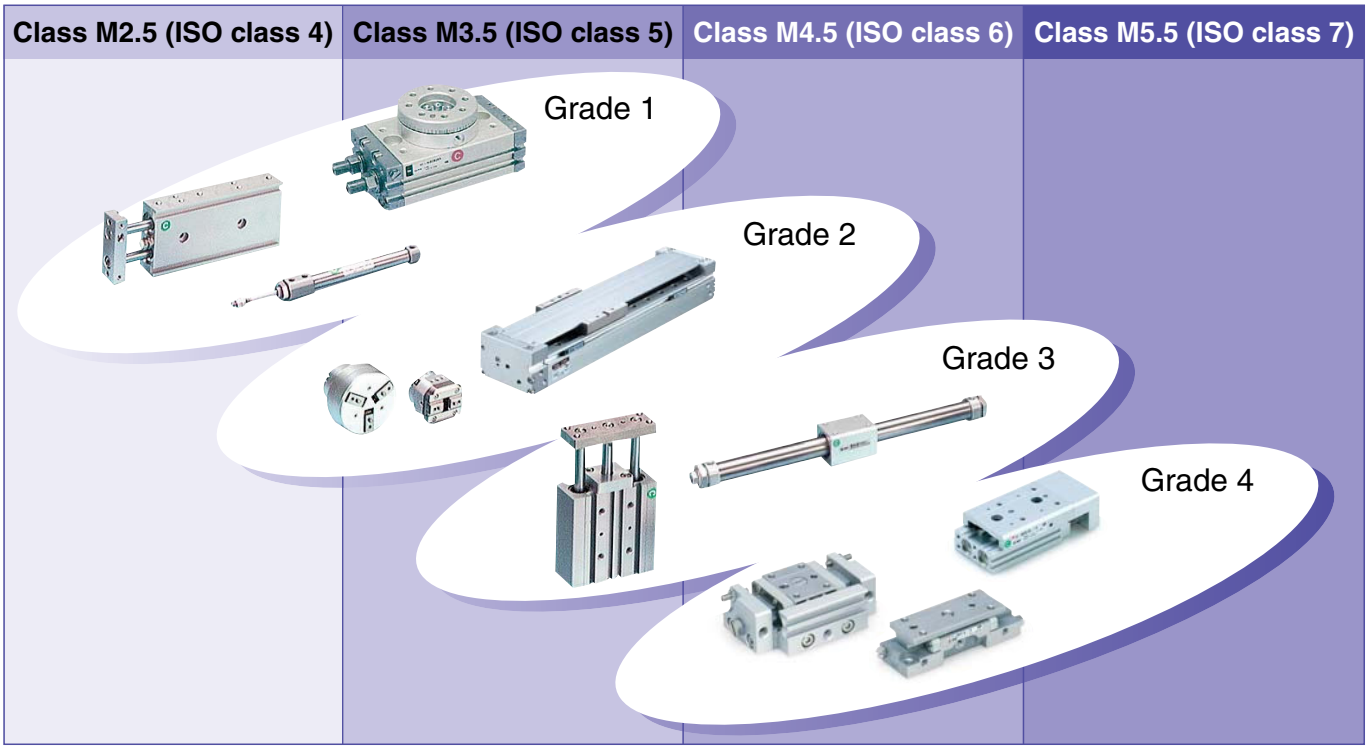

The view above shows an image. Refer to front matter 13 to 22 and the specifications for particle generation grade of each equipment.

Clean Series *Series 10-/11-/12-/13-*

Available for clean environment.
Particle generation in a clean room can be prevented.

Applicable model

Actuator, (Air cylinder, Rotary actuator, Air gripper), Directional control valve, Flow control equipment,Filter & Pressure control equipment, Fittings & Tubing, Air preparation equipment, Pressure switch, Clean gas filter

Note) 11-/12-/13- are available only for actuators.

Special Clean Series

Special clean series pursues improvement of cleanliness than the clean series.
This series was developed considering construction, material and assembly environment for use in a clean environment.

Applicable model

Clean rodless cylinder, Clean regulator, Clean one-touch fitting, Clean tubing,
Clean gas filter

Copper, Fluorine, and Silicon free + Low particle generation *Series 21-/22-*

For the environment in which the use of copper, fluorine and silicon are restricted.
The same structure as clean series. (Grease and package style are different.)

Applicable model

Actuator (Air cylinder, Rotary actuator, Air gripper), Directional control valve, Flow control equipment,Pressure control equipment, Fittings & Tubing

Note) 22-: Available only for actuators.

Courtesy of Steven Engineering, Inc - (800) 258-9200 - sales@steveneng.com - www.stevenengineering.com

Particle generation grade classification

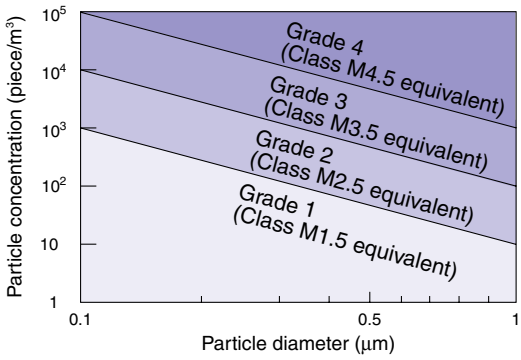

Cleanliness class

SMC	Fed.Std.209E SI unit	ISO 14644-1
Grade 1	M1.5	ISO class 3
Grade 2	M2.5	ISO class 4
Grade 3	M3.5	ISO class 5
Grade 4	M4.5	ISO class 6
	M5.5	ISO class 7
	M6.5	ISO class 8

The grade classification is the SMC original method. The smaller the grade no., the less the particle generation.
The upper concentration limit of the cleanliness class based on Fed. Std. 209E-1992 is shown in parentheses.

(Refer to Front matter 23 "Particle generation measuring method" and Front matter 24 "Comparison of cleanliness standards" for details.)

Note) Do not use one-touch fittings 10-KQ (including solenoid valves with built-in one-touch fittings and speed controllers with one-touch fittings) in Grade 1 or Grade 2 areas because internal pressure change may move the collet chuck slightly, which may cause particle generation. This does not apply to insert fittings (KF), miniature fittings (M, MS), clean one-touch fittings (KP,KPQ,KPG) and speed controllers with clean one-touch fittings (AS-FPQ/FPG).

No dust is carried into the clean room.

After inspection, products are blown with high purity air (clean bench/class M3.5) in a clean environment. Products are sealed and shipped in anti-static double bags.

10-/11-/12-/13- (Clean series.)	Products assembled in a clean room (Special clean series)
Assembly and inspection in a workshop ↓ Clean room Class M6.5 Wipe the surface with alcohol to remove oil. ↓ Clean room Class 100.000 Clean booth Class M3.5 Internal packaging after giving blow to the surface with clean air (countermeasure against static electricity) ↓ Clean room Class M6.5 External packaging (double packaging) ↓ Shipment	Clean booth Class M3.5 Clean bench Class M3.5 in a clean room Class M5.5 Parts cleaning ↓ Assembly and inspection ↓ Double packaging ↓ Shipment

21-/22-series are packed in an usual manner (assembly and inspection in a workshop — packaging — shipment). Please contact SMC for clean packaging.

Courtesy of Steven Engineering, Inc - (800) 258-9200 - sales@steveneng.com - www.stevenengineering.com

Basic specifications of actuator

	Series 10-	Series 11-	Series 12-	
Construction	· **Double seal type / release to atmosphere** 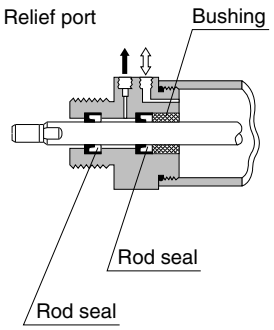 	· **Single seal type / vacuum suction** 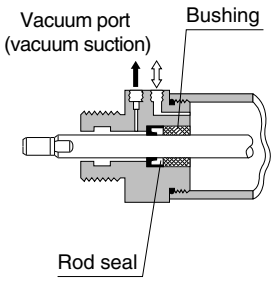 	· **Guide cylinder** · **Dual rod cylinder** Double seal type / release to atmosphere (Series 10- equivalent) and specially treated guide Ball bushing guide Linear guide	· **Rodless cylinder** Specially treated cylinder tube exterior 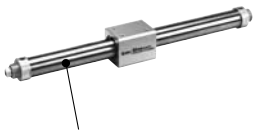 Cylinder tube
Restricted material	No			
Grease	Fluorine grease			
Assembly environment	General environment (Assembly and inspection in a workshop)			
Packaging style	Clean packaging: Products are sealed in anti-static double bags after giving			

Basic specifications of other equipment

	Series 10-				
Construction	· **Directional control valve** Main valve and pilot valve common exhaust 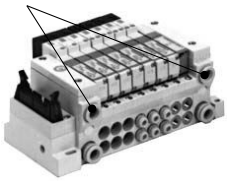 · **Pressure control equipment** 	· **Air filter** Fitting, speed controller, pressure switch, etc. have the same structure as those of standard.	· **Clean regulator** All wetted parts are made of stainless steel, FPM and PTFE, and exterior metal parts are made of anodized aluminum, which provides high corrosion resistance. 	· **Clean one-touch fittings(for blow)** · **Clean tubing** Polyolefin Resin	
Restricted material	No				
Grease	Fluorine grease		—	—	
Assembly environment	General environment (Assembly and inspection in a workshop)		Parts are cleaned and		
Packaging style	Clean packaging: Products are sealed in anti-static double bags after				

SMC

Courtesy of Steven Engineering, Inc - (800) 258-9200 - sales@steveneng.com - www.stevenengineering.com

Series 13-	Special clean series	Series 21-	Series 22-
· **Guide cylinder** · **Air slide table** Single seal type/ vacuum suction (Series 11- equivalent) and specially treated guide Ball bushing guide Linear guide	· **Clean rodless cylinder** No contact between the cylinder tube exterior and the slider interior 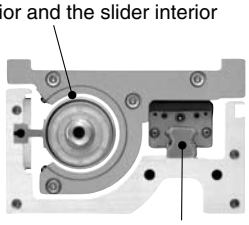 Linear guide Special treatment	· **Double seal type / release to atmosphere** 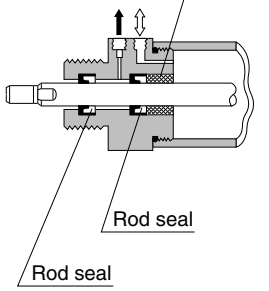 	· **Single seal type/ vacuum suction** 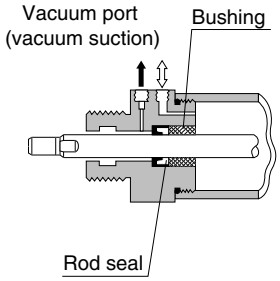
	No	Copper, fluorine and silicon-free	
	Fluorine grease	Lithium soap base grease	
	Parts are cleaned and assembled in a clean room.	General environment (Assembly and inspection in a workshop)	
blow to the surface with clean air.		Standard packaging Note)	

Note) Contact SMC for clean packaging.

Special clean		Series 21-	
· **Clean one-touch fittings(for drive system air piping)** · **Clean speed controller** Polypropylene resin 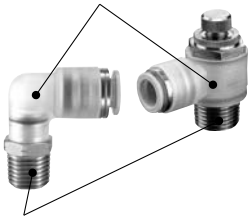 Metal part Brass (Electroless nickel plated) or Stainless steel 304	· **Exhaust cleaner for clean room** 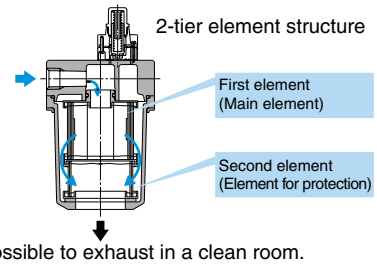 Possible to exhaust in a clean room. · **Clean gas filter** **PTFE membrane element** 	· **Directional control valve** · **Pressure control equipment** · **The same construction as Series 10-**	· **Clean one-touch fittings (for drive system air piping)** · **Clean speed controller** No seal to the thread parts ∗ Available for uni thread. (Made to Order)
No		Copper, fluorine and silicon-free	
Fluorine grease	—	Lithium soap base grease	
assembled in a clean room.		General environment (Assembly and inspection in a workshop)	Parts are cleaned and assembled in a clean room.
giving blow to the surface with clean air.		Standard packaging Note)	

Note) Contact SMC for clean packaging.

Courtesy of Steven Engineering, Inc - (800) 258-9200 - sales@steveneng.com - www.stevenengineering.com

System Circuit in Clean Room

Following are the actuator driving system and circuit configuration of blow system employed to reduce particle generation when using pneumatic equipment in a clean room.

• Actuator driving system

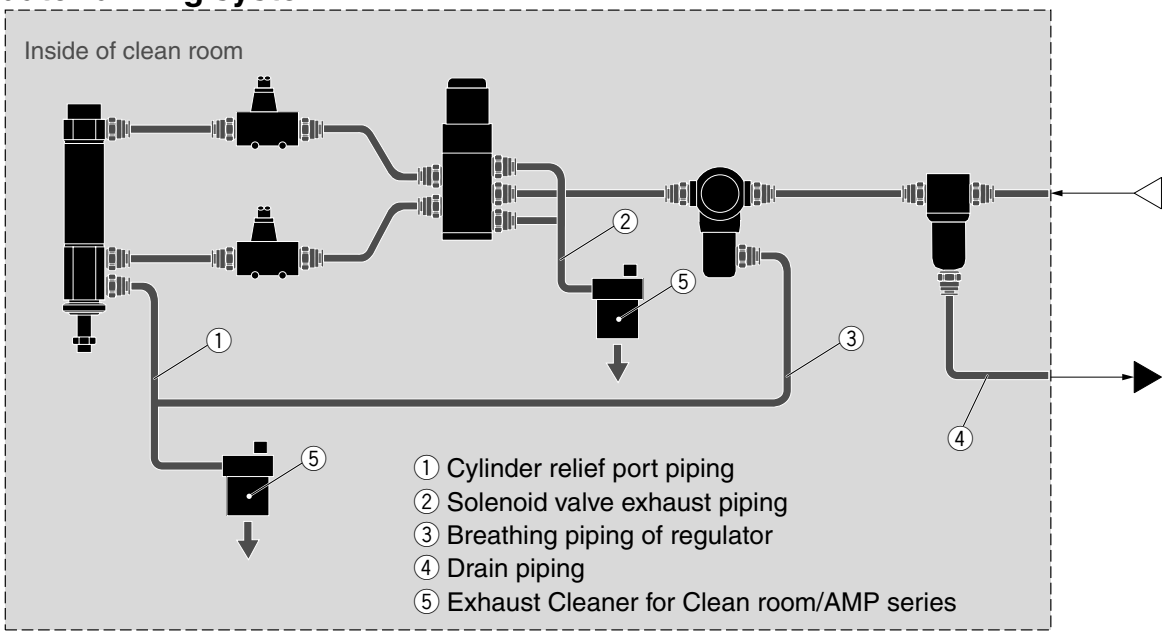

• Cylinder relief port piping

Series 10-/12-/21- (atmospheric release type)

Connect the relief port piping with the dedicated duct piping installed outside the clean room or with the exhaust cleaner for clean room/AMP series.

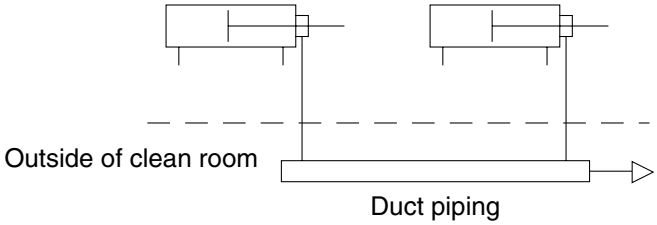

Series 11-/13-/22- (Vacuum suction type)

With a vacuum pump

When several air cylinders are used together or a model with high vacuum suction flow is used.

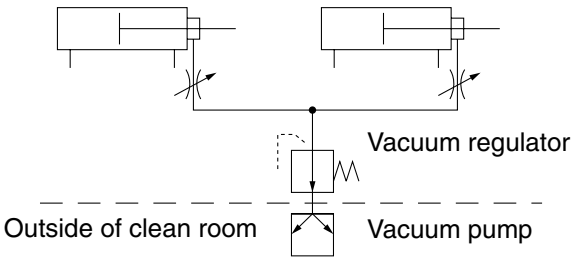

With an ejector

When a few air cylinders are locally used.

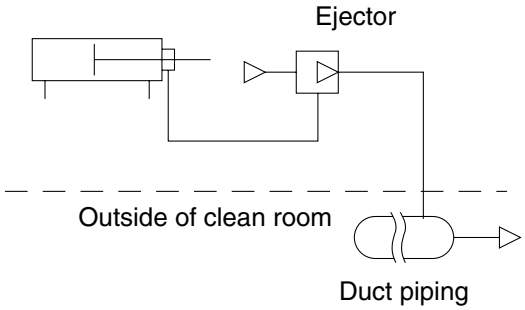

Courtesy of Steven Engineering, Inc - (800) 258-9200 - sales@steveneng.com - www.stevenengineering.com

• Clean blow system

Example of equipment to suit each clean blow grade

Line A: For oil-free air blow
Line B: For clean blow
Line C: For clean blow
(With clean gas filter)
Line D: For N_2 blow

Change in particle generation with time

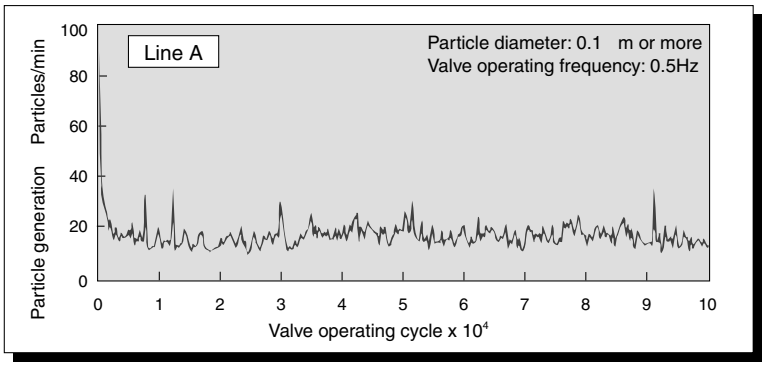

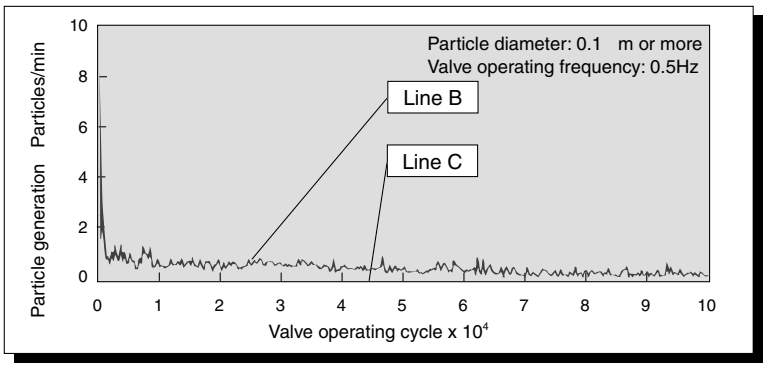

• Example of air line equipment

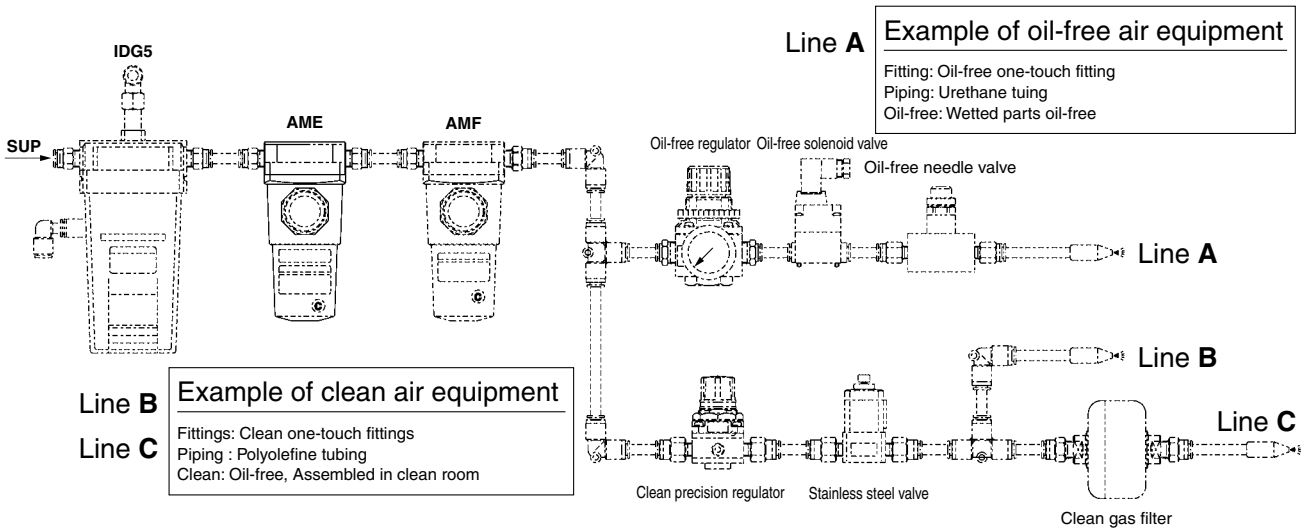

• Example of N_2 equipment

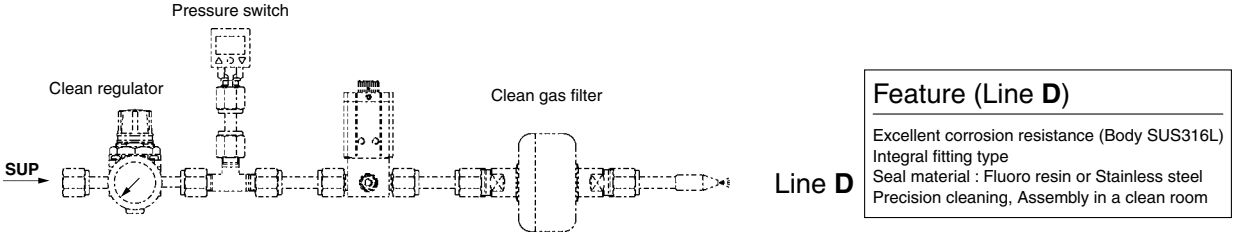

SMC

Courtesy of Steven Engineering, Inc - (800) 258-9200 - sales@steveneng.com - www.stevenengineering.com

The position of the pneumatic equipment to the workpiece is determined by the particle generation degree.

Particle generation grade no. of the pneumatic equipment ≦ The article concentration grade no. around the workpiece

Classification of particle generation grades

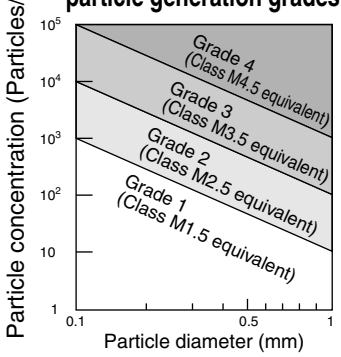

The grade classification is the SMC original method. The smaller the grade number, the less the particle generation. The upper concentration limit of the cleanliness class based on Fed. Std. 209E-1992 is shown in parentheses. (Refer to Front matter 23 "Particle generation measuring method"and Front matter 24 "Comparison of cleanliness standards" for details.)

Note) Do not use one-touch fittings 10-KQ (including solenoid valves with built-in one-touch fittings and speed controllers with one-touch fittings) in Grade 1 or Grade 2 areas because internal pressure change may cause slight move of the collet chuck, which may cause particle generation. This does not apply to insert fittings (KF), miniature fittings (M, MS), clean one-touch fittings (KP, KPQ, KPG) and speed controllers with clean one-touch fittings (AS-FPQ/FPG).

Cleanliness class

SMC	Fed.Std.209E SI unit	ISO 14644-1
Grade 1	M1.5	ISO class 3
Grade 2	M2.5	ISO class 4
Grade 3	M3.5	ISO class 5
Grade 4	M4.5	ISO class 6
–	M5.5	ISO class 7
–	M6.5	ISO class 8

Selection procedure

(1) Required clean room cleanliness? — Class M2.5 or Class M3.5 or Class M4.5?

↓

(2) Air flow to the workpiece (Refer to Diagram 1.)

↓

(3) Where is the pneumatic equipment located? (Refer to Diagram 2.)

↓

(4) Determine the particle concentration grade no. around the workpiece based on above (1) to (3). (Refer to Table 1.)

↓

(5) Select the equipment to be used. (Refer to Front matter 13 to 22.)

Diagram 1 Air flow

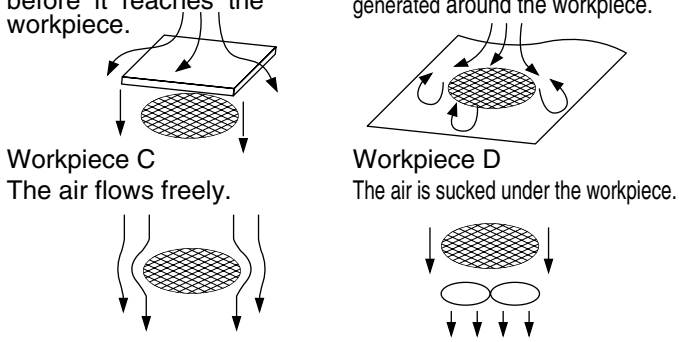

Diagram 2 Installation location of equipment

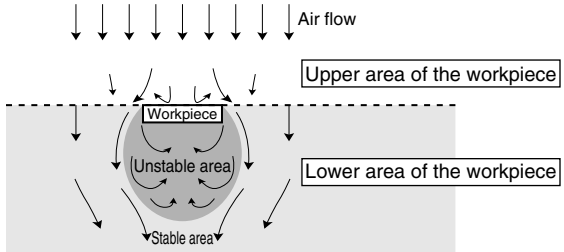

Table 1 Particle concentration grade around the workpiece

(2) Workpiece		A,B			C			D		
(3) Position of the equipment to be used		Upper area of the workpiece	Lower area of the workpiece		Upper area of the workpiece	Lower area of the workpiece		Upper area of the workpiece	Lower area of the workpiece	
			Unstable area	Stable area		Unstable area	Stable area		Unstable area	Stable area
(1) Cleanliness	Class M2.5				Grade 1		Grade 2	Grade 1	Grade 2	
	Class M3.5					Grade 2	Grade 3			Grade 3
	Class M4.5	Grade 1	Grade 2	Grade 3	Grade 2	Grade 3	Grade 4	Grade 2	Grade 3	Grade 4

:Class M2.5 and M3.5 levels of cleanliness cannot be achieved in area due to dust accumulation or flotation.

Courtesy of Steven Engineering, Inc - (800) 258-9200 - sales@steveneng.com - www.stevenengineering.com

Cylinder

Description			Model	Particle generation grade by series						
				Standard	10-	11-	12-	13-	21-	22-
	Air Cylinder	Standard	10-/11-/21-/22-CJ2	3	2	1			2	1
		Double rod	10-/11-/21-/22-CJ2W							
		Direct mount type	10-/11-/21-/22-CJ2RA							
	Air Cylinder	Standard	10-/11-/21-/22-CM2	3	2	1			3	1
		Double rod	10-/11-/21-/22-CM2W							
		Direct mount type	10-/11-/21-/22-CM2R							
		End lock	10-/11-/21-/22-CBM2							
	Air Cylinder	Standard	10-/11-/21-/22-CG1	3	2	1			3	1
		Double rod	10-/11-/21-/22-CG1W							
		Direct mount type	10-/11-/21-/22-CG1R							
	Air Cylinder Standard		10-/11-/21-/22-CA2	3	2	1			3	1
	Mini-free Mount Cylinder		10-/11-CUJ	3	2	1				
	Free Mount Cylinder		10-/11-/21-/22-CDU	3	2	1			3	1
	Compact Cylinder		10-/11-/21-/22-CQS	3	2	1			2	1
			10-/11-/21-/22-CQ2	3	2	1			2	1
	Sine Cylinder		10-/11-REC	3	2	1				
	Dual Rod Cylinder		11-/12-/21-/22-CXSJ	3, 4 Note)		1	2		3	1
			10-/11-/12-/21-/22-CXS	3, 4 Note)	2	1	2		3	1

Note) Grade is different depending on the type of the ball bearing.

Values in ▒ show grades.
☐ No grade applies to the blanks.

CXSJ

Model	Bearing type	Standard
CXSJL	Ball bushing bearing	3
CXSJM	Slide bearing	4

CXS

Model	Bearing type	Standard
CXSL	Ball bushing bearing	3
CXSM	Slide bearing	4

SMC

Courtesy of Steven Engineering, Inc - (800) 258-9200 - sales@steveneng.com - www.stevenengineering.com

Particle Generation Measuring Method

The particle generation data for SMC CLEAN SERIES are measured in the following test method.

Test method (Example)

Place the specimen in the acrylic resin chamber and operate it while supplying the same flow rate of clean air as the suction flow rate of the measuring instrument (15ℓ/min). Measure the changes of the particle concentration over time until the number of cycles reaches the specified point.The chamber is placed in a Class M3.5 clean bench.

Measuring conditions

Chamber	Internal volume	15ℓ
	Supply air quality	Same quality as the supply air for driving
Measuring instrument	Description	Laser dust monitor (Automatic particle counter by light-scattering method)
	Model no.	TS-1500
	Minimum measurable particle diameter	0.17 m
	Suction flow rate	15ℓ/min
	Manufacturer	Hitachi Electronics Engineering Co. Ltd.
Setting conditions	Sampling time	5min
	Interval time	55min
	Sampling air flow	75ℓ

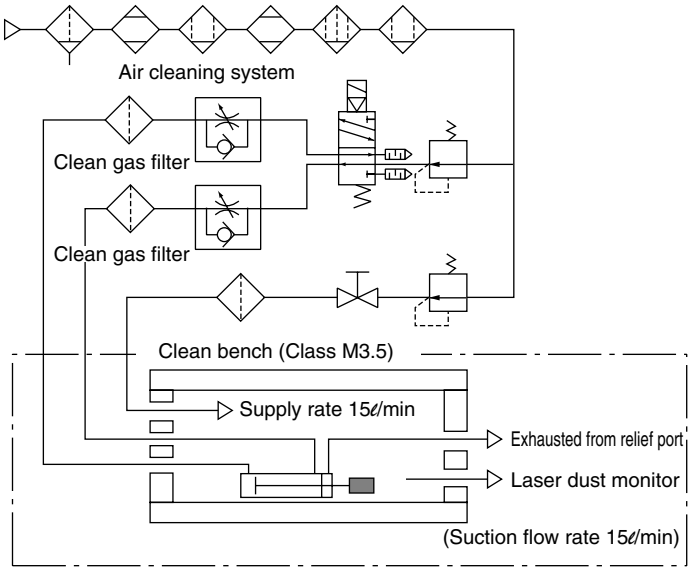

Particle generation measuring circuit

Evaluation method

To obtain the measured values of particle concentration, the accumulated value Note 1) of particles captured every 5 minutes, by the laser dust monitor, is converted into the particle concentration in every 1m^3.

When determining particle generation grades, the 95% upper confidence limit of the average particle concentration (average value), when each specimen is operated at a specified number of cycles Note 2) is considered.

The plots in the graphs indicate the 95% upper confidence limit of the average particle concentration of particles with a diameter within the horizontal axis range.

Note 1) Sampling air flow rate: Number of particles contained in 75ℓ of air
Note 2) Actuator: 1 million cycles
Solenoid valve: 2 million cycles

■Particle generation characteristics of CM2

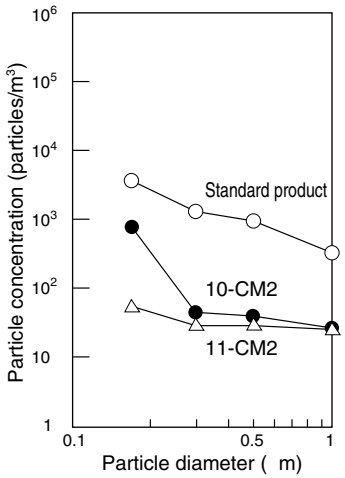

■Particle generation characteristics of CXSL

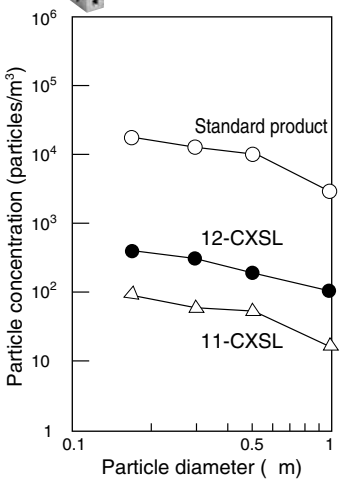

■Particle generation characteristics of CY1B

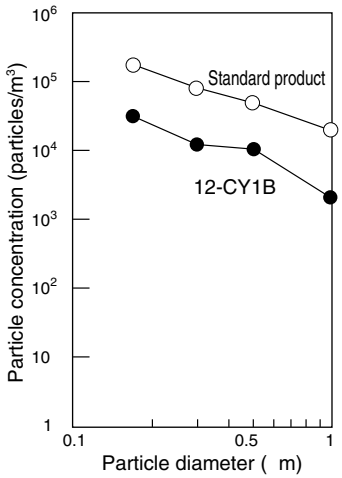

Courtesy of Steven Engineering, Inc - (800) 258-9200 - sales@steveneng.com - www.stevenengineering.com

Comparison of Cleanliness Standards

Standard		Fed.Std.209E		ISO 14644-1
Cleanliness classes		British unit: Class 1 to 100.000 SI unit: Class M1 to M7 U descriptor: Particles diameter smaller than 0.1 μm		ISO Cass 1 to 9 Intermediate classes available U descriptor: Particles smaller than 0.1 μm M descriptor: Particles larger than 5.0 μm
	Corresponding class indication	(British unit)	(SI unit)	
				ISO Class 1
				ISO Class 2
		1	M1.5	ISO Class 3
		10	M2.5	ISO Class 4
		100	M3.5	ISO Class 5
		1000	M4.5	ISO Class 6
		10000	M5.5	ISO Class 7
		100000	M6.5	ISO Class 8
				ISO Class 9
Cleanliness class indication		The number of particles diameter larger than 0.5 μm in an air volume of $1m^3$ is expressed in 10M or coefficient Nc. Cleanliness class: Nc or M		The number of particles larger than 0.1 μm in an air volume of $1m^3$ is expressed in 10^N. ISO Class N: Occupancy state: Considered particle size
Calculation of the maximum permitted concentration of particulate cleanliness classes		British unit: Number of particles/ft^3 = Nc x $(0.5/D)^{22}$ SI unit: Number of particles/m^3 = 10M x $(0.5/D)^{22}$		Cn = 10^N x $(0.1/D)^{2.08}$
Evaluation method using a simple sampling		① Number of sampling locations: 2 to 9 95% UCL of the mean and the mean of the averages ② Number of sampling locations: 10 or more The mean		① Number of sampling locations: 2 to 9 95% UCL of the mean and the mean of the averages ② Number of sampling locations: 1, or 10 or more The mean
Number of sampling locations		① Non-unidirectional airflow: at least two locations N_L = A x $64/(10M)^{0.5}$ ② Unidirectional airflow: at least two locations Smaller value between N_L=A/2.32 and N_L=A x $64/(10M)^{0.5}$		Derive it from the area of the cleanroom or clean air controlled space. The number of sampling locations N_L = $(A)^{0.5}$ At least one location
Min. sampling air flow volume		2 litters or a sufficient volume of air that a minimum of 20 particles could be counted if the particle concentration were at the class limit.		2 litters or a sufficient volume of air that a minimum of 20 particles could be counted if the particle concentration were at the class limit. Min. sampling time: 1 minute
Number of samplings		Total number of samplings in each clean zone: 5 times or more		Where only one sampling location is required, take a minimum of three single sample volumes at that location.
Sampling method		5.0 μm and larger: Constant velocity and suction in the same direction of the air flow 0.5 to 5 μm: Correction possible when it is sucked at a nonconstant velocity		Suction in the same direction as the airflow If the direction of the airflow is not predictable, the inlet of the sampling probe shall be directed vertically upward.

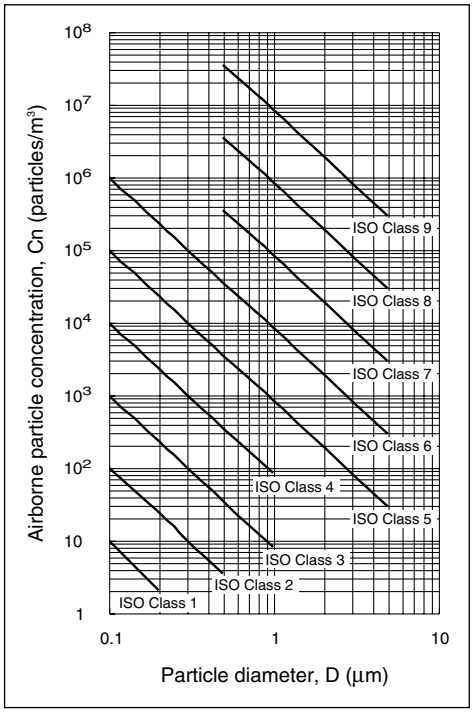

Cleanliness class (N)		Maximum concentration limit (particles/m^3) Considered particle diameter (μm)					
		0.1	0.2	0.3	0.5	1	5
ISO Class	1	10	2				
	2	100	24	10	4		
	3	1000	237	102	35	8	
	4	10000	2370	1020	352	83	
	5	100000	23700	10200	3520	832	29
	6	1000000	237000	102000	35200	8320	293
	7				352000	83200	2930
	8				3520000	832000	29300
	9				35200000	8320000	293000

Note) Concentration data with no more than three significant figures be used in determining the classification level.

Cn = 10^N x $(0.1/D)^{2.08}$

Cn: The maximum permitted concentration of airborne particles that are equal to or larger than the considered particle size (D). Cn is rounded down to the nearest whole number, using no more than three significant figures.

N: Class no.(1 to 9), intermediate class (1.1 to 8.9)

D: Measured particle diameter (μm)

0.1: Constant number (μm)

Courtesy of Steven Engineering, Inc - (800) 258-9200 - sales@steveneng.com - www.stevenengineering.com

How to Order

Clean Series

10	Relief type
11	Vacuum suction type

Cushion

Nil	Rubber bumper (Standard)
A	Air cushion (except ø6)

10 - C D J 2 L 16 - 60 A R H7B □

21 - C D J 2 L 16 - 60 R H7B □

Mounting style

B	Basic style
L	Axial foot style
F	Rod side flange style

Head cover port location

Symbol \ Bore size (mm)	6	10,16
Nil	–	Perpendicular to the cylinder axis
R	Axial direction	Axial direction

Copper, fluorine and silicon- free + low particle generation

21	Relief type
22	Vacuum suction type

Bore size (mm)

Cylinder stroke (mm)

Type of auto switch

Reed switch	C73
Solid state switch	H7B, H7A1

∗ Band mounting only

Built-in magnet

Nil	No
D	With auto switch (Built-in magnet)

Number of auto switches

Nil	2 pcs.
S	1 pc.
n	n pcs.

Model

	Model	Tube Bore size (mm)	Port size	Lubrication	Action	Standard stroke (mm)	Auto Switch Mounting	Cushion Rubber	Cushion Air ∗
Relief type	10-/21-CJ2□6	6	M5 x 0.8	Non-lube	Double acting Single rod	15, 30, 45, 60	○ Band mounting only	○ Standard	○ Except ø6
Relief type	10-/21-CJ2□10	10				15, 30, 45, 60, 75, 100, 125, 150			
Relief type	10-/21-CJ2□16	16				15, 30, 45, 60, 75, 100, 125, 150, 175, 200			
Vacuum suction type	11-/22-CJ2□6	6				15, 30, 45, 60			
Vacuum suction type	11-/22-CJ2□10	10				15, 30, 45, 60, 75, 100, 125, 150			
Vacuum suction type	11-/22-CJ2□16	16				15, 30, 45, 60, 75, 100, 125, 150, 175, 200			

∗ Air cushion is not available for 21-/22-.

Specifications

Item \ Bore size (mm)	6	10/16
Proof pressure	1.05MPa	
Max. operating pressure	0.7MPa	
Min. operating pressure	0.14MPa	0.08MPa (Air cushion 0.1MPa)
Ambient and fluid temperature	Without auto switch : –10°C to 70°C, With auto switch : –10°C to 60°C (With no condensation)	
Piston speed	50 to 400mm/s	
Stroke length tolerance	$^{+1.0}_{0}$	
Mounting style	Basic style / Axial foot style / Rod side flange style	
Grease	10-/11-: Fluorine grease, 21-/22-: Lithium soap base grease	
Particle generation grade (Refer to front matter pages 13 to 22 for details.)	10-/21-: Grade 2, 11-/22-: Grade 1	

Suction flow rate of vacuum type (Reference values)

Size	Suction flow rate ℓ/min (ANR)
6/10/16	1

Courtesy of Steven Engineering, Inc - (800) 258-9200 - sales@steveneng.com - www.stevenengineering.com

Auto Switch Specifications (Refer to Best Pneumatics catalog for detailed specifications and auto switches not in the following table.)

Style <Contact>		Auto switch part no.	Load voltage	Load current range	Indicator light	Application
Reed switch		D-C73	24 VDC	5 to 40mA	○	Relay, PLC
			100 VAC	5 to 20mA		
Solid state switch	2-wire type	D-H7B	24 VDC (10 to 28 VDC)	5 to 40mA	○	24 VDC Relay, PLC
	3-wire type	D-H7A1	28 VDC or less	40mA or less	v	IC circuit, Relay, PLC

Auto switch mounting method is band mounting only

Refer to applicable auto switch list — Page 182.

PLC: Programmable Logic Controller

Auto switches / Proper mounting position at stroke end detection

D-C73

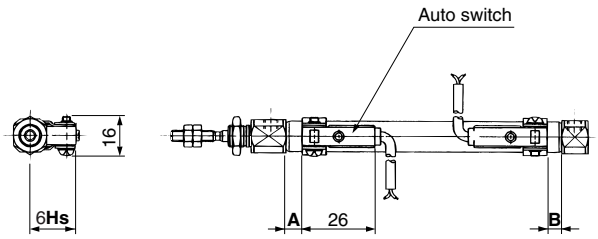

D-H7A1 / H7B

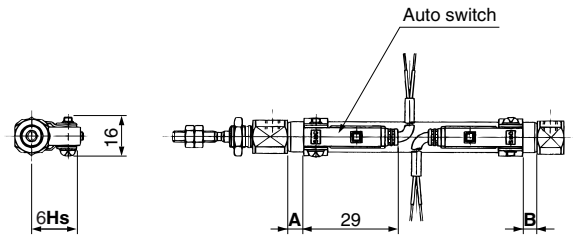

(mm)

Bore size	D-C73			D-H7A1/H7B		
	A	B	Hs	A	B	Hs
6	2	2	15	1	1	15
10	2.5	2.5	17	1.5	1.5	17
16	3	3	20.5	2	2	20.5

Note) The above-mentioned value is a guide for auto switch mounting position for stroke enddetection. When actually mounting the auto switch, adjust the position after confirming the operating state of the auto switch.

Mounting Bracket / Part No.

Mounting bracket	Bore size (mm)		
	6	10	16
Foot bracket	CJ-L010B	CJ-L016B	CJK-L016B
Flange	CJ-F010B	CJ-F016B	CJK-F016B

Specific Product Precautions

Be sure to read before handling.

Caution on mounting

⚠ Caution

1. When installing the cylinder, secure the rod cover and apply proper tightening torque to the retaining nut or tighten the rod cover by applying proper tightening torque.
   If the head cover is secured or tightened, the cover could rotate, leading to misalignment.
2. Apply proper screw tightening torque within the following range.
   ø6: 5.9 to 6.4N·m
   ø10: 10.8 to 11.8N·m
   ø16: 20.0 to 21.0N·m

Courtesy of Steven Engineering, Inc - (800) 258-9200 - sales@steveneng.com - www.stevenengineering.com

Basic style (B) / 10-/11-CJ2B, 21-/22-CJ2B

Rubber bumper

ø6

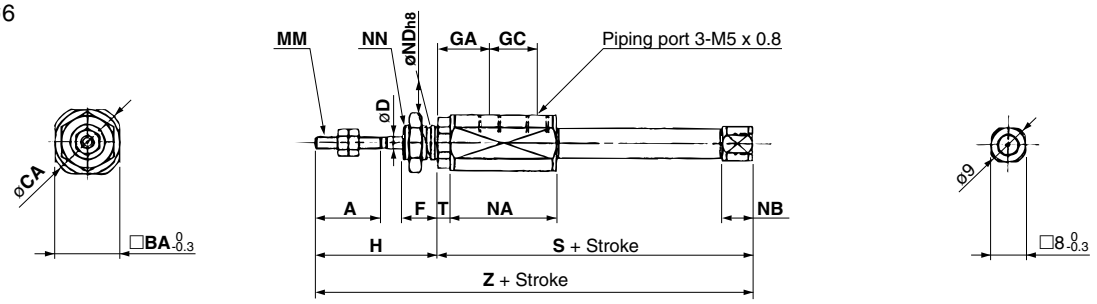

ø10 and ø16

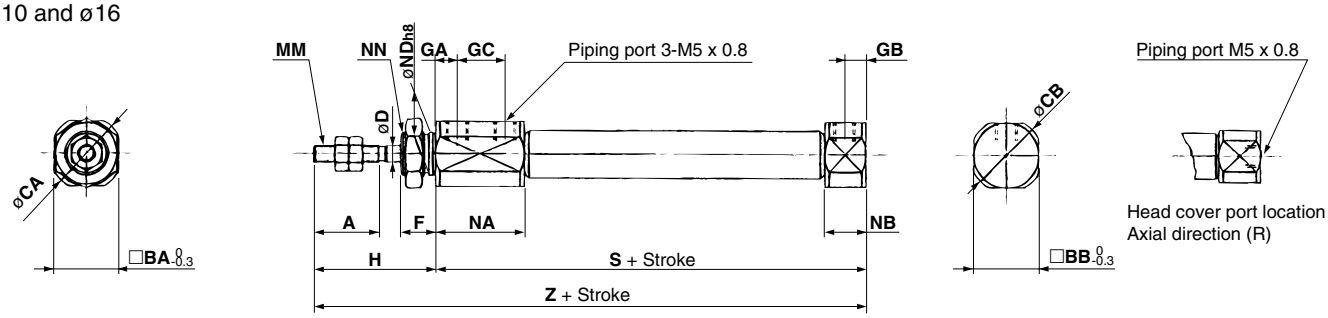

(mm)

Bore size	A	BA	BB	CA	CB	D	F	GA	GB	GC	H	MM	NA	NB	ND_{h8}	NN	S	T	Z
6	15	15	—	17	—	3	8	12	—	11	28	M3 x 0.5	24.5	7	$8^{0}_{-0.022}$	M8 x 1.0	57.5	3	85.5
10	15	15	12	17	14	4	8	5	5	11	28	M4 x 0.7	20.5	9.5	$10^{0}_{-0.022}$	M10 x 1.0	54	—	82
16	15	18.3	18.3	20	20	5	8	5	5	11	28	M5 x 0.8	20.5	9.5	$12^{0}_{-0.027}$	M12 x 1.0	55	—	83

With air cushion

With air cushion type is not available for 21- / 22- CJ2.

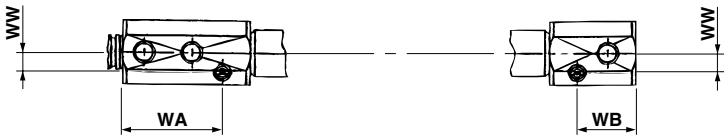

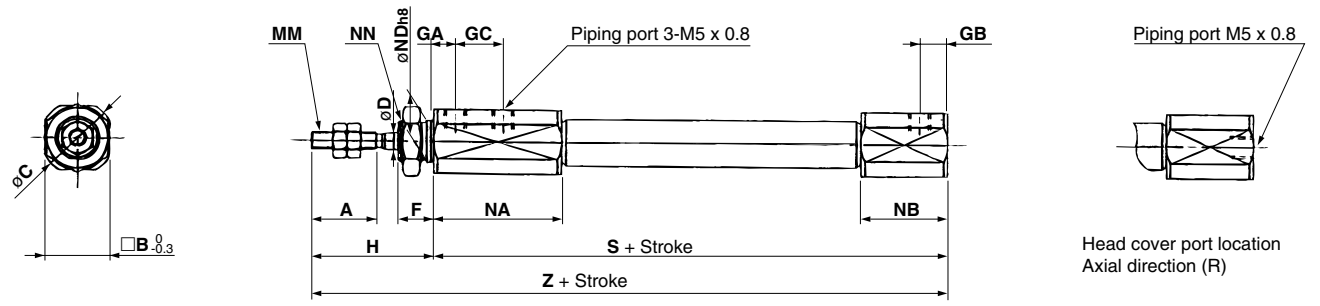

(mm)

Bore size	A	B	C	D	F	GA	GB	GC	H	MM	NA	NB	ND_{h8}	NN	S	WA	WB	WW	Z
10	15	15	17	4	8	5	6.5	11	28	M4 x 0.7	29.5	20	$10^{0}_{-0.022}$	M10 x 1.0	73.5	23	13.5	4.5	101.5
16	15	18.3	20	5	8	5	6.5	11	28	M5 x 0.8	29.5	20	$12^{0}_{-0.027}$	M12 x 1.0	74.5	23	13.5	5.5	102.5

SMC

Courtesy of Steven Engineering, Inc - (800) 258-9200 - sales@steveneng.com - www.stevenengineering.com

Axial foot style (L) / 10-/11-CJ2L, 21-/22-CJ2L

Rubber bumper

ø6

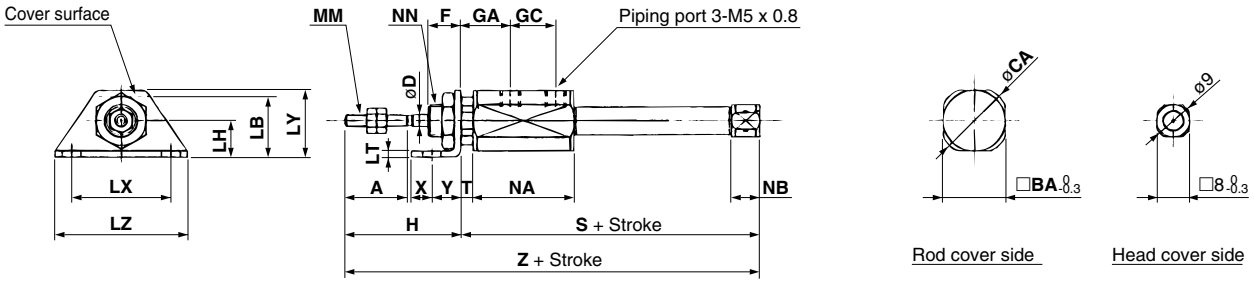

ø10 and ø16

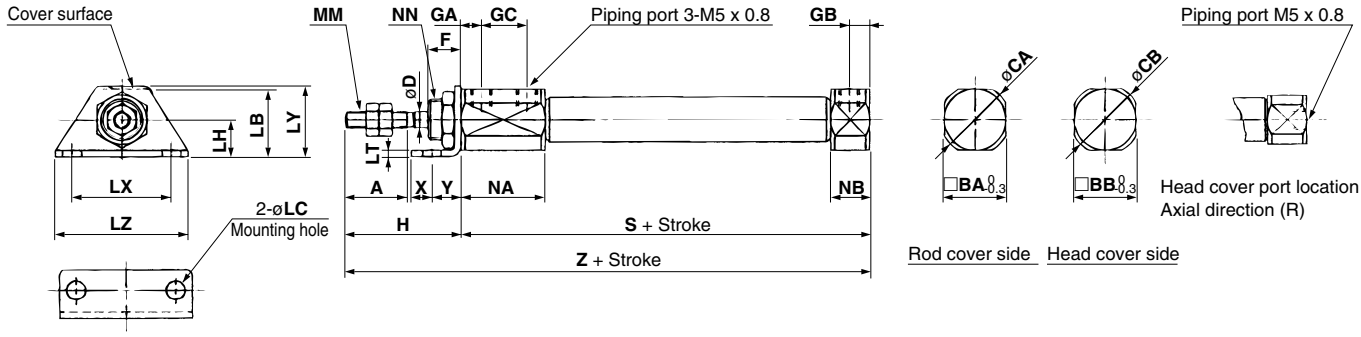

(mm)

Bore size	A	BA	BB	CA	CB	D	F	GA	GB	GC	H	LB	LC	LH	LT	LX	LY	LZ	MM	NA	NB	NN	S	T	X	Y	Z
6	15	15	—	17	—	3	8	12	—	11	28	16.5	4.5	9	1.6	24	16.5	32	M3 x 0.5	24.5	7	M8 x 1.0	57.5	3	5	7	85.5
10	15	15	12	17	14	4	8	5	5	11	28	21.5	5.5	14	2.3	33	25	42	M4 x 0.7	20.5	9.5	M10 x 1.0	54	—	6	9	82
16	15	18.3	18.3	20	20	5	8	5	5	11	28	23	5.5	14	2.3	33	25	42	M5 x 0.8	20.5	9.5	M12 x 1.0	55	—	6	9	83

With air cushion

With air cushion type is not available for 21- / 22- CJ2.

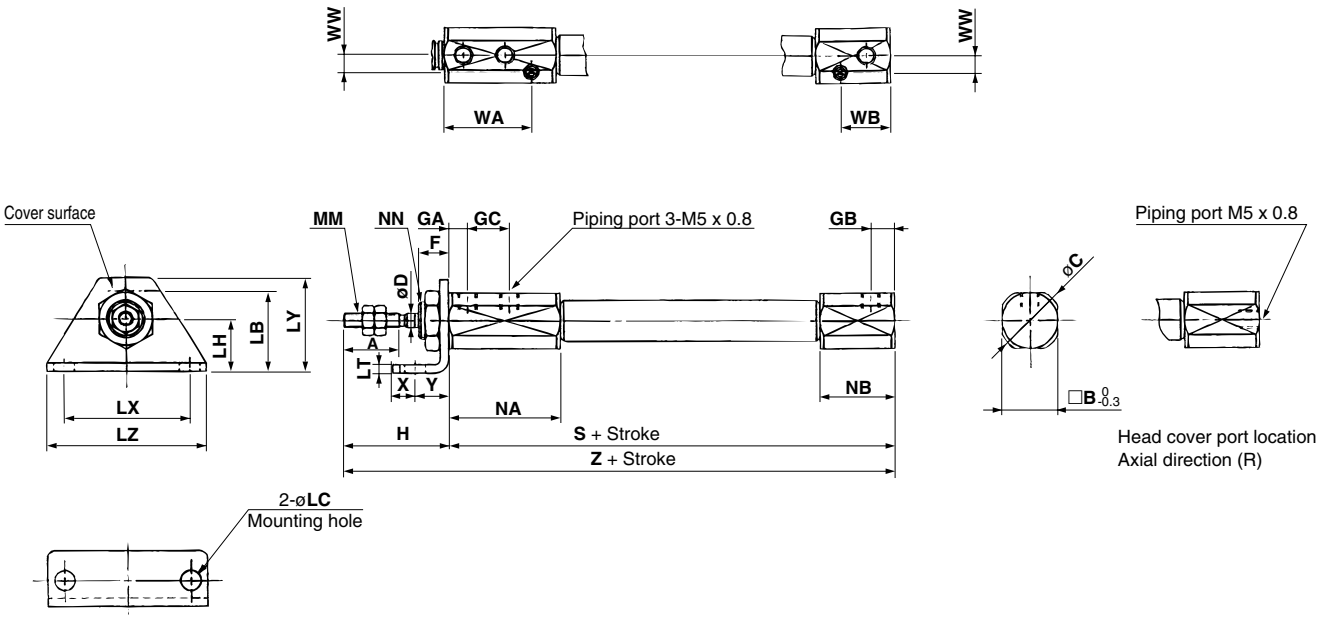

(mm)

Bore size	A	B	C	D	F	GA	GB	GC	H	LB	LC	LH	LT	LX	LY	LZ	MM	NA	NB	NN	S	WA	WB	WW	X	Y	Z
10	15	15	17	4	8	5	6.5	11	28	21.5	5.5	14	2.3	33	25	42	M4 x 0.7	29.5	20	M10 x 1.0	73.5	23	13.5	4.5	6	9	101.5
16	15	18.3	20	5	8	5	6.5	11	28	23	5.5	14	2.3	33	25	42	M5 x 0.8	29.5	20	M12 x 1.0	74.5	23	13.5	5.5	6	9	102.5

Courtesy of Steven Engineering, Inc - (800) 258-9200 - sales@steveneng.com - www.stevenengineering.com

Rod side flange style (F) / 10-/11-CJ2F, 21-/22-CJ2F

Rubber bumper

ø6

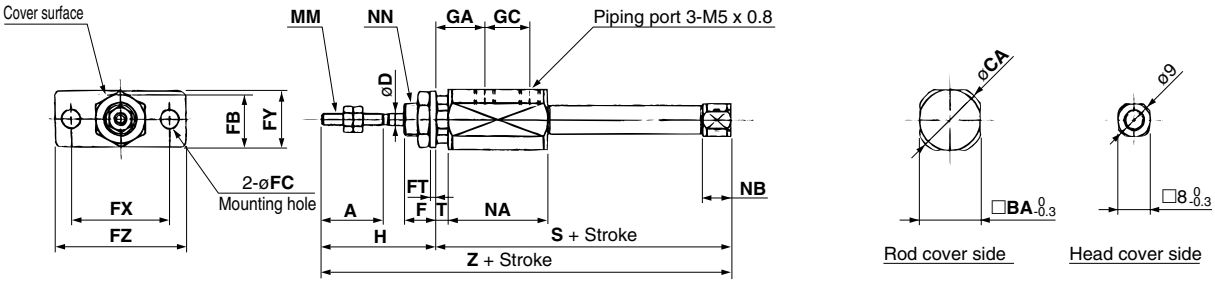

ø10 and ø16

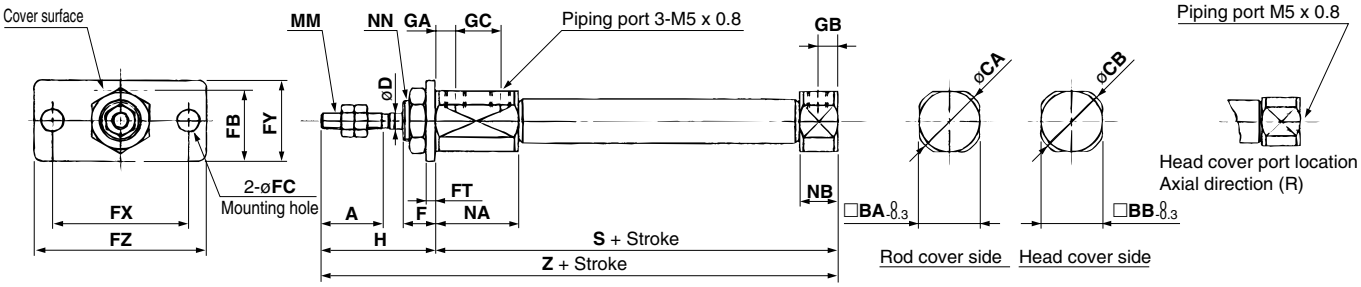

(mm)

Bore size	A	BA	BB	CA	CB	D	F	FB	FC	FT	FX	FY	FZ	GA	GB	GC	H	MM	NA	NB	NN	S	T	Z
6	15	15	—	17	—	3	8	14.5	4.5	1.6	24	14	32	12	—	11	28	M3 x 0.5	24.5	7	M8 x 1.0	57.5	3	85.5
10	15	15	12	17	14	4	8	17.5	5.5	2.3	33	20	42	5	5	11	28	M4 x 0.7	20.5	9.5	M10 x 1.0	54	—	82
16	15	18.3	18.3	20	20	5	8	19	5.5	2.3	33	20	42	5	5	11	28	M5 x 0.8	20.5	9.5	M12 x 1.0	55	—	83

With air cushion

With air cushion type is not available for 21- / 22- CJ2.

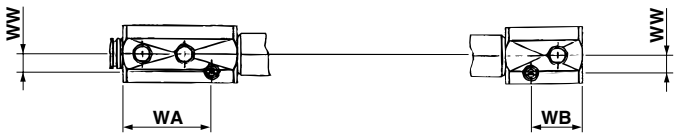

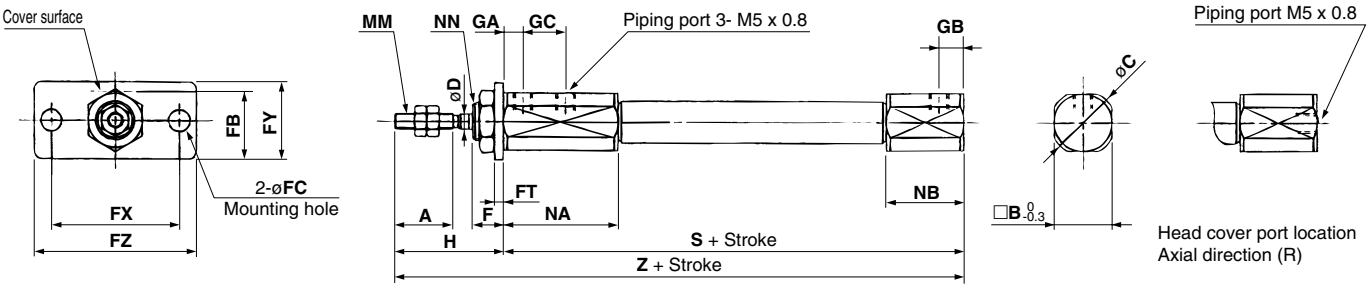

(mm)

Bore size	A	B	C	D	F	FB	FC	FT	FX	FY	FZ	GA	GB	GC	H	MM	NA	NB	NN	S	WA	WB	WW	Z
10	15	15	17	4	8	17.5	5.5	2.3	33	20	42	5	6.5	11	28	M4 x 0.7	29.5	20	M10 x 1.0	73.5	23	13.5	4.5	101.5
16	15	18.3	20	5	8	19	5.5	2.3	33	20	42	5	6.5	11	28	M5 x 0.8	29.5	20	M12 x 1.0	74.5	23	13.5	5.5	102.5

SMC

Courtesy of Steven Engineering, Inc - (800) 258-9200 - sales@steveneng.com - www.stevenengineering.com

Mounting Nut

Material: Brass

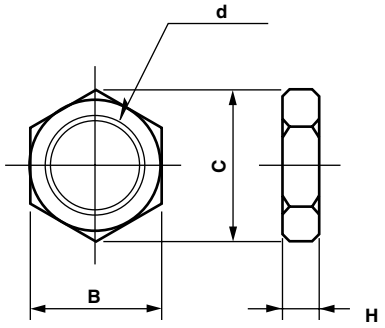

(mm)

Part no.	Applicable bore size	B	C	d	H
SNJ-010B	6	11	12.7	M8 x 1.0	4
SNJ-016B	10	14	16.2	M10 x 1.0	4
SNKJ-016B	16	17	19.6	M12 x 1.0	4

∗ The applicable mounting nuts are different from those for standard cylinders.

Rod end nut

Material: Carbon steel

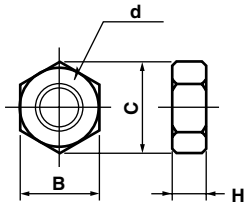

(mm)

Part no.	Applicable bore size	B	C	d	H
NTJ-006A	6	5.5	6.4	M3 x 0.5	2.4
NTJ-010A	10	7	8.1	M4 x 0.7	3.2
NTJ-015A	16	8	9.2	M5 x 0.8	4

Courtesy of Steven Engineering, Inc - (800) 258-9200 - sales@steveneng.com - www.stevenengineering.com

How to Order

Clean Series

10	Relief type
11	Vacuum suction type

10 - C D J 2 W L 16 - 60 - H7B □

21 - C D J 2 W L 16 - 60 - H7B □

Number of auto switches

Nil	2 pcs.
S	1 pc.
n	n pcs.

Built-in magnet

Nil	No
D	With auto switch (Built-in magnet)

Type of auto switch

Reed switch	C73
Solid state switch	H7B, H7A1

∗ Band mounting only

Cylinder stroke (mm)

Bore size (mm)

Copper, fluorine and silicon-free + low particle generation

21	Relief type
22	Vacuum suction type

Mounting style

B	Basic style
L	Axial foot style
F	Flange style

Model

Model		Bore size (mm)	Port size	Lubrication	Action	Standard stroke (mm)	Auto switch mounting	Cushion	
								Rubber	Air
Relief type	**10-/21-CJ2W□10**	10	M5 x 0.8	Non-lube	Double acting Double rod	15, 30, 45, 60	○ Band mounting only	○ Standard	—
Relief type	**10-/21-CJ2W□16**	16							
Vacuum suction type	**11-/22-CJ2W□10**	10							
Vacuum suction type	**11-/22-CJ2W□16**	16							

Specifications

Item \ Bore size (mm)	10 /16
Proof pressure	1.05MPa
Max. operating pressure	0.7MPa
Min. operating pressure	0.1MPa
Ambient and fluid temperature	Without auto switch :–10°C to 70°C With auto switch :–10°C to 60°C (With no condensation)
Piston speed	50 to 400mm/s
Stroke length tolerance	$^{+1.0}_{0}$
Mounting style	Basic style /Axial foot style /Flange style
Grease	10-/11-: Fluorine grease 21-/22-: Lithium soap base grease
Particle generation grade	10-/21-: Grade 2
(Refer to front matter pages 13 to 22 for details.)	11-/22-: Grade 1

Suction flow rate of vacuum type (Reference values)

Size	Suction flow rate ℓ/min (ANR)
10 / 16	1

Courtesy of Steven Engineering, Inc - (800) 258-9200 - sales@steveneng.com - www.stevenengineering.com

Auto Switch Specifications (Refer to Best Pneumatics No. 2 for detailed specifications and auto switches not in the following table.)

Style <Contact>		Auto switch part no.	Load voltage	Load current range	Indicator light	Application
Reed switch		D-C73	24 VDC	5 to 40mA	○	Relay, PLC
			100 VAC	5 to 20mA		
Solid state switch	2-wire type	D-H7B	24 VDC(10 to 28 VDC)	5 to 40mA	○	24 VDC Relay, PLC
	3-wire type	D-H7A1	28 VDC or less	40mA or less	○	IC circuit, Relay, PLC

∗ Auto switch mounting method is band mounting only

PLC: Programmable Logic Controller

Refer to applicable auto switch list — Page 182.

Auto switches / Proper mounting position at stroke end detection

Same as those of the double acting single rod type.

Specific Product Precautions

Be sure to read before handling.

Caution on mounting

⚠ Caution

1. When installing the cylinder, secure the rod cover on the mounting side and apply proper tightening torque to the retaining nut or tighten the rod cover on the mounting side by applying proper tightening torque.
   If the rod cover on the other side is secured or tightened, the cover could rotate, leading to misalignment.
2. Apply proper screw tightening torque within the following ranges.
   ø6: 5.9 to 6.4N·m
   ø10: 10.8 to 11.8N·m
   ø16: 20.0 to 21.0N·m

Courtesy of Steven Engineering, Inc - (800) 258-9200 - sales@steveneng.com - www.stevenengineering.com

Basic style (B) / 10-/11-CJ2WB, 21-/22-CJ2WB

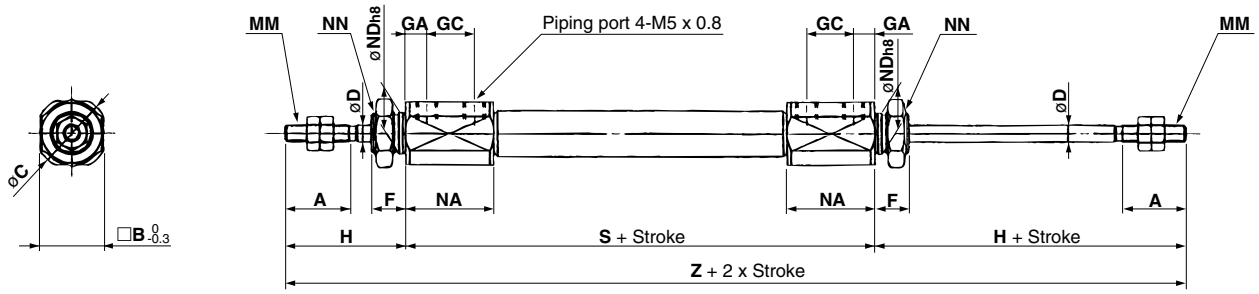

(mm)

Bore size	A	B	C	D	F	GA	GC	H	MM	NA	NDh8	NN	S	Z
10	15	15	17	4	8	5	11	28	M4 x 0.7	20.5	10 0 -0.022	M10 x 1.0	65	121
16	15	18.3	20	5	8	5	11	28	M5 x 0.8	20.5	12 0 -0.027	M12 x 1.0	66	122

Axial foot style (L) / 10-/11-CJ2WL, 21-/22-CJ2WL

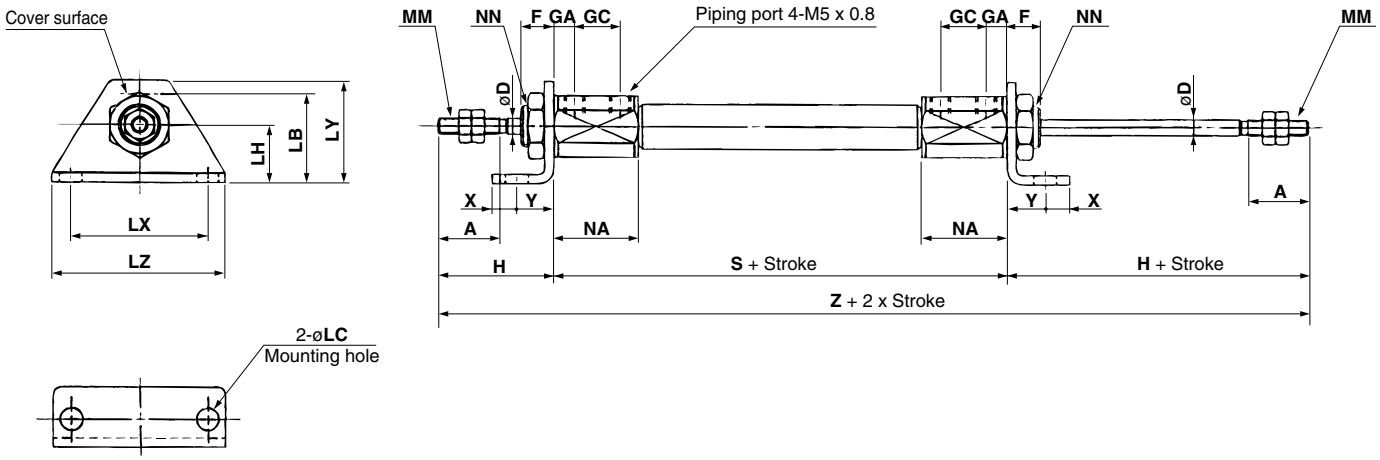

(mm)

Bore size	A	D	F	GA	GC	H	LB	LC	LH	LT	LX	LY	LZ	MM	NA	NN	S	X	Y	Z
10	15	4	8	5	11	28	21.5	5.5	14	2.3	33	25	42	M4 x 0.7	20.5	M10 x 1.0	65	6	9	121
16	15	5	8	5	11	28	23	5.5	14	2.3	33	25	42	M5 x 0.8	20.5	M12 x 1.0	66	6	9	122

SMC

Courtesy of Steven Engineering, Inc - (800) 258-9200 - sales@steveneng.com - www.stevenengineering.com

Flange (F) / 10-/11-J2WF, 21-/22-CJ2WF

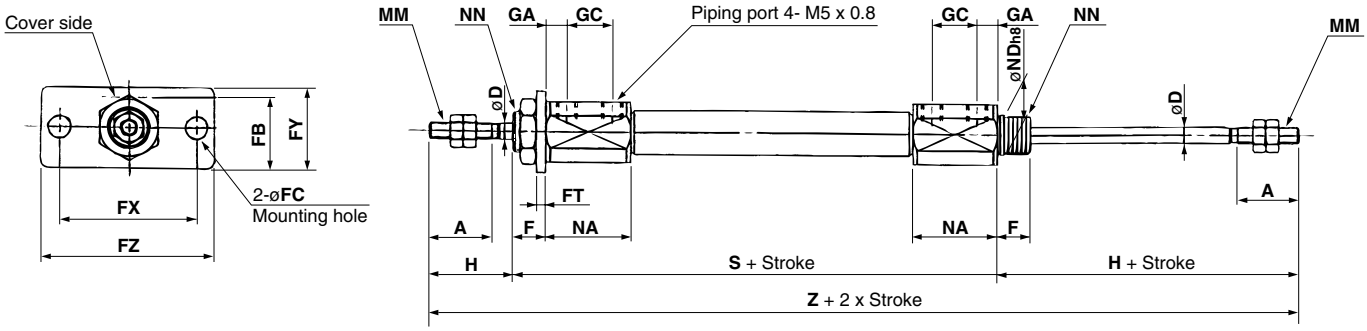

(mm)

Bore size	A	D	F	FB	FC	FT	FX	FY	FZ	GA	GC	H	MM	NA	ND_{h8}	NN	S	Z
10	15	4	8	17.5	5.5	2.3	33	20	42	5	11	28	M4 x 0.7	20.5	$10^{0}_{-0.022}$	M10 x 1.0	65	121
16	15	5	8	19	5.5	2.3	33	20	42	5	11	28	M5 x 0.8	20.5	$12^{0}_{-0.027}$	M12 x 1.0	66	122

Courtesy of Steven Engineering, Inc - (800) 258-9200 - sales@steveneng.com - www.stevenengineering.com

How to Order

Clean series

10	Relief type
11	Vacuum suction type

10-CDJ2RA16-60R-H7B

21-CDJ2RA16-60R-H7B

Number of auto switches

Nil	2 pcs.
S	1 pc.
n	"n" pcs.

Built-in magnet

Nil	No
D	With auto switch (Built-in magnet)

Type of auto switch

Reed switch	C73
Solid state switch	H7B,H7A1

∗Band mounting only

Copper, fluorine and silicon-free + low particle generation

21	Relief type
22	Vacuum suction type

Port location on head cover

Symbol	Port location on head cover
Nil	Perpendicular to the cylinder axis
R	Axial direction

Cylinder stroke (mm)

Bore size (mm)

Model

Model		Bore size (mm)	Port size	Lubrication	Action	Standard stroke (mm)	Auto switch mounting	Cushion	
								Rubber	Air
Relief type	10-/21-CJ2RA10	10	M5 x 0.8	Non-lube	Double acting Single rod	15,30,45,60,75,100,125,150	Available Band mounting only	Available Standard	Not available
Relief type	10-/21-CJ2RA16	16				15,30,45,60,75,100,125,150,175,200			
Vacuum suction type	11-/22-CJ2RA10	10				15,30,45,60,75,100,125,150			
Vacuum suction type	11-/22-CJ2RA16	16				15,30,45,60,75,100,125,150,175,200			

Specifications

Item \ Bore size (mm)	10/16
Proof pressure	1.05MPa
Maximum operating pressure	0.7MPa
Minimum operating pressure	0.08MPa
Ambient and fluid temperature	Without auto switch : –10°C to 70°C With auto switch : –10°C to 60°C (No freezing)
Piston speed	50 to 400 mm/s
Stroke length tolerance	$^{+1.0}_{0}$
Mounting style	Bottom mounting style
Grease	10-/11-: Fluorine grease 21-/22-: Lithium soap based grease
Particle generation grade (Refer to front matter pages 13 to 22 for details.)	10-/21-: Grade 2 11-/22-: Grade 1

Suction flow rate of vacuum suction type (Reference values)

Bore size	Suction flow rate ℓ/min (ANR)
10/16	1

Courtesy of Steven Engineering, Inc - (800) 258-9200 - sales@steveneng.com - www.stevenengineering.com

Auto switch specifications (Refer to Best Pneumatics catalog for detailed specifications and auto switches not in the following table.)

Type		Auto switch part no.	Load voltage	Load current range	Indicator light	Application
Reed switch		D-C73	24 VDC	5 to 40 mA	Yes	Relay, PLC
			100 VAC	5 to 20 mA		
Solid state switch	2-wire	D-H7B	24 VDC (10 to 28 VDC)	5 to 40mA	Yes	24 VDC relay, PLC
	3-wire	D-H7A1	28 VDC or less	40 mA or less	Yes	IC circuit, Relay, PLC

∗Auto switch mounting method is band mounting only.

PLC: Programmable Logic Controller

Refer to page 182 for a list of applicable auto switches.

Proper auto switch mounting position (Detection at stroke end)

D-C73

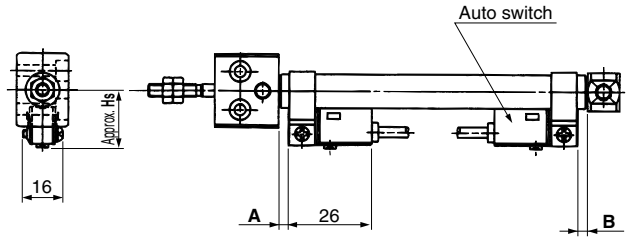

D-H7A1/H7B

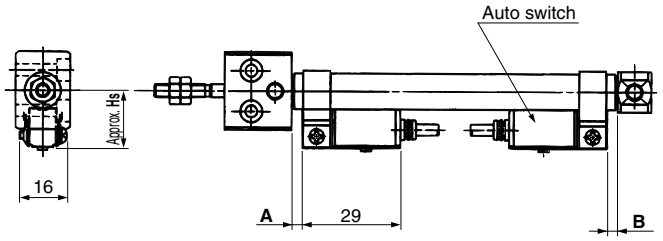

(mm)

Bore size	D-C73			D-H7A1/H7B		
	A	B	Hs	A	B	Hs
10	2.5	2.5	17	1.5	1.5	17
16	3	3	20.5	2	2	20.5

Note) The above values should be used as a guide for detection at stroke end. When actually mounting the auto switch, adjust the position after confirming the operating conditions of the auto switch.

Specific Product Precautions

Be sure to read before handling.

Caution on mounting

⚠ Caution

1. During installation, secure the rod cover and tighten by applying an appropriate tightening force to the retaining nut or to the rod cover body.
   If the head cover is secured or the head cover is tightened, the cover could rotate, leading to the deviation.
2. Tighten the retaining screws to an appropriate tightening torque within the range given below.
   ø6: 5.9 to 6.4 N·m
   ø10: 10.8 to 11.8 N·m
   ø16: 20.0 to 21.0 N·m

Bottom mounting / 10-11-CJ2RA, 21-22-CJ2RA

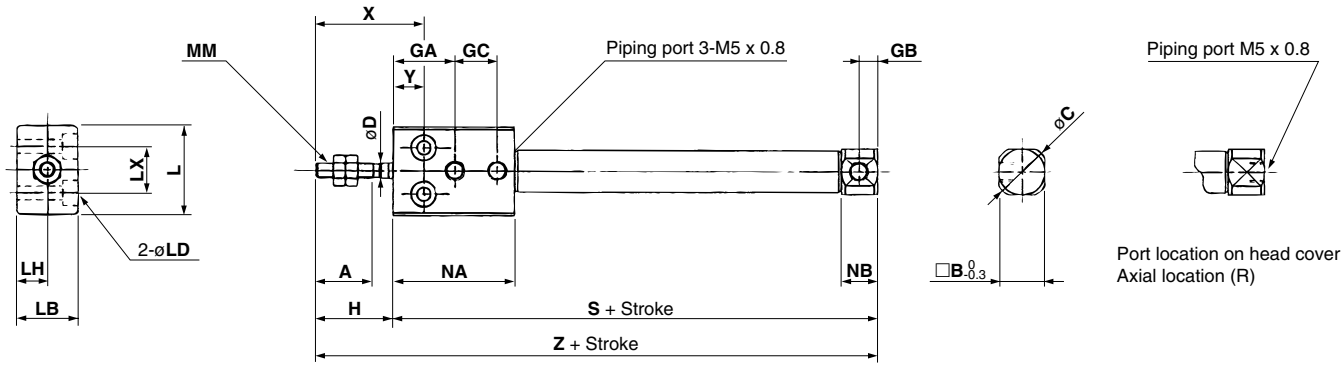

(mm)

Bore size	A	B	C	D	GA	GB	GC	H	L	LB	LD	LH	LX	MM	NA	NB	S	X	Y	Z
10	15	12	14	4	16	5	11	20	23	16	ø3.5, ø6.5 counterbore depth 4	8	12	M4 x 0.7	31.5	9.5	65	28	8	85
16	15	18.3	20	5	16	5	11	20	26	20	ø4.5, ø8 counterbore depth 5	10	16	M5 x 0.8	31.5	9.5	66	28	8	86

Courtesy of Steven Engineering, Inc - (800) 258-9200 - sales@steveneng.com - www.stevenengineering.com

Actuator / Common Precautions 1

Be sure to read before handling. Refer to the main text for precautions for each series.

Precaution on designing

⚠ Warning

1. **There is a possibility of dangerous sudden action by air cylinders if sliding parts of machinery are twisted due to external forces, etc.**
   In such cases, personal injury by catching hands or feet in the machinery, or damage to the machinery itself may occur. Therefore, the machine should be adjusted to operate smoothly and designed to avoid such dangers.

2. **A protective cover is recommended to minimize the risk of personal injury.**
   If a driven object and moving parts of a cylinder are in close proximity, personal injury may occur. Design the structure to avoid contact with the human body.

3. **Securely tighten all stationary parts and connected parts so that they will not become loose.**
   Particularly when a cylinder operates at a high frequency or is installed in a place where there is a lot of vibration, ensure that all parts remain secure.

4. **A deceleration circuit may be required.**
   When a driven object is operated at high speed or the load is heavy, a cylinder's cushion will not be sufficient to absorb the impact. Install a deceleration circuit to reduce the speed before cushioning to relieve the impact.
   In this case, the rigidity of the machinery should also be examined.

5. **Consider a possible drop in circuit pressure due to a power outage, etc.**
   When a cylinder is used in a clamping mechanism, there is a danger of workpiece dropping if there is a decrease in clamping force due to a drop in circuit pressure caused by a power outage, etc. Therefore, safety equipment should be installed to prevent damage to machinery and personal injury. Suspension mechanisms and lifting devices also require consideration for drop prevention.

6. **Consider a possible loss of power source.**
   Measures should be taken to avoid personal injury and equipment damage in the event that there is a loss of power to equipment controlled by pneumatics, electricity, or hydraulics.

7. **Design circuitry to prevent the sudden lurching of driven objects.**
   When a cylinder is driven by an exhaust center type directional control valve or when it is started up after residual pressure is exhausted from the circuit, etc., the piston and its driven object will lurch when the cylinder is operated at high speed if pressure is applied to one side of the cylinder, due to the absence of air pressure inside the cylinder. Therefore, equipment should be selected and circuits should be designed to prevent this sudden lurching, because there is a danger of personal injury and/or damage to equipment when this occurs.

8. **Consider emergency stops.**
   Design the machinery so that personal injury and/or damage to machinery and equipment will not occur when the machinery is stopped by a safety device under abnormal conditions, such as a power outage or a manual emergency stop.

9. **Consider the action when operation is restarted after an emergency stop or abnormal stop.**
   Design the machinery so that personal injury or equipment damage will not occur upon restart of operation.
   When the cylinder has to be reset at the start position, install safety manual control equipment.

Selection

⚠ Warning

1. **Confirm the specifications.**
   The products featured in this catalog are designed for use in industrial compressed air systems. If the products are used in conditions where pressure and/or temperature are outside the range of specifications, damage and/or malfunctions may occur. Do not use in these conditions. (Refer to the specifications).
   Please consult with SMC if you use a fluid other than compressed air.

2. **Intermediate Stops**
   With a 3-position closed center type valve, it is difficult to accurately and precisely stop a piston at the required position in the same way as can be done with hydraulic pressure due to the compressibility of air.
   Furthermore, since valves and cylinders, etc. are not guaranteed for zero air leakage, it may not be possible to hold a stopped position for an extended period of time. Please contact with SMC when it is necessary to hold a stopped position for an extended period of time.

⚠ Caution

1. **Operate within the limits of the maximum feasible stroke.**
   Operation that exceeds the maximum stroke may damage a piston rod. Refer to the air cylinder model selection procedures for the maximum feasible strokes.

2. **Operate a cylinder within a range such that collision damage will not occur to a piston at the stroke end.**
   Operate a cylinder within a range so that a piston having inertial force will not be damaged when it collides against the cover at the stroke end. Refer to the air cylinder model selection procedures for the maximum feasible strokes.

3. **Use a speed controller to adjust the cylinder speed, gradually increasing from a low speed to the desired speed setting.**

4. **Provide intermediate supports for long stroke cylinders.**
   An intermediate support should be provided in order to prevent damage to a long stroke cylinder, due to problems such as sagging of the rod, deflection of the cylinder tube, vibration and external load.

Courtesy of Steven Engineering, Inc - (800) 258-9200 - sales@steveneng.com - www.stevenengineering.com

Actuator / Common Precautions 2

Be sure to read before handling. Refer to the main text for precautions for each series.

Mounting

⚠ Caution

1. **Be certain to match the rod shaft center with the load and direction of movement when connecting.**
   When not properly matched, problems may arise with the rod and tube, and damage may be caused due to friction on areas such as the inner tube surface, bushings, rod surface, and seals.
2. **When using an external guide, connect the rod end and the load in such a way that there is no interference at any point within the stroke.**
3. **Do not scratch or gouge the sliding portion of the cylinder tube or the piston rod by striking it with an object, or squeezing it.**
   The tube bore is manufactured under precise tolerances. Thus, even a slight deformation could lead to a malfunction.
   Moreover, scratches or gouges, etc. in the piston rod may lead to damaged seals and cause air leakage.
4. **Do not use until you verify that the equipment can operate properly.**
   After mounting, repairs, or modification, etc., connect the air supply and electric power, and then confirm proper mounting by means of appropriate function and leak tests.
5. **Instruction manual**
   Install the products and operate them only after reading the instruction manual carefully and understanding its contents.
   Also keep the manual where it can be referred to as necessary.

Cushion

⚠ Caution

1. **Readjust with a cushion needle.**
   Cushions are adjusted at the time of shipment; however, the cushion needle on the cover should be readjusted, when the product is put into service based on factors such as the size of the load and the operating speed. When the cushion needle is turned clockwise, the restriction becomes smaller and the cushion's effectiveness is increased. Tighten the lock nut securely after adjustment is performed.
2. **Do not operate the actuator with the cushion needle fully closed.**
   This could damage the seals.

Air Supply

⚠ Warning

1. **Use clean air.**
   Do not use compressed air which contains chemicals, synthetic oil containing organic solvents, salts or corrosive gases, etc. as this may cause damage or malfunction.

⚠ Caution

1. **Install air filters.**
   Install air filters close to valves at their upstream side. A filtration degree of 5 m or less should be selected.
2. **Install an aftercooler, air dryer, or water separator (Drain Catch).**
   Compressed air that includes excessive drainage may cause malfunction of valves and other pneumatic equipment. To prevent this, install an air dryer, aftercooler or water separator (drain catch), etc.
3. **Use the product within the specified range of fluid and ambient temperature.**
   Take measures to prevent freezing at temperature below 5°C, since moisture in circuits may freeze and cause damage to seals and lead to malfunctions.

Courtesy of Steven Engineering, Inc - (800) 258-9200 - sales@steveneng.com - www.stevenengineering.com

Actuator / Common Precautions 3

Be sure to read before handling. Refer to the main text for precautions for each series.

Operating Environment

⚠ Warning

1. **Do not use in atmospheres or locations where corrosion hazards exist.**
   Refer to the construction drawings regarding cylinder materials.
2. **In locations where ultrapure water or cleaning solvent, etc. splashes on the equipment, take suitable measures to protect the rod.**

Maintenance

⚠ Warning

1. **Perform maintenance procedures as shown in the instruction manual.**
   Improper handling may result in malfunction and damage of machinery or equipment.
2. **Removal of equipment, and supply / exhaust of compressed air**
   Before any machinery or equipment is removed, first ensure that the appropriate measures are in place to prevent the fall or erratic movement of driven objects and equipment, then cut off the electric power and release the compressed air in the system.
   When machinery is restarted, proceed with caution after confirming that appropriate measures are in place to prevent cylinders from sudden movement.

⚠ Caution

1. **Drain flushing**
   Remove drainage from air filters regularly.

Courtesy of Steven Engineering, Inc - (800) 258-9200 - sales@steveneng.com - www.stevenengineering.com

Auto switch / Common Precautions 1

Be sure to read before handling. Refer to the main text for precautions for each series.

Design/Selection

⚠ Warning

1. Confirm the specifications.
Read the specifications carefully and use this product appropriately. The product may be damaged or malfunction if it is used outside the specifications of current voltage, temperature or impact.

2. Use caution when multiple cylinders are used in close proximity to each other.
When two or more auto switch cylinders are lined up in close proximity to each other, magnetic field interference may cause the switches to malfunction. Maintain a minimum cylinder separation of 40mm. (When the allowable interval is specified for each cylinder series, use the indicated value.)

3. Use caution to the ON time of a switch at the intermediate position of stroke.
When an auto switch is placed at an intermediate position of the stroke and a load is driven at the time the piston passes, the auto switch will operate, but if the speed is too fast, the operating time will be shortened and the load may not operate properly. The maximum detectable piston speed is :

$$V\ (mm/s) = \frac{\text{Auto switch operation range (mm)}}{\text{Load operating time (ms)}} \times 1000$$

In cases of high piston speed, the use of an auto switch (D-F5NT, F7NT, G5NT and M5□T) with a built-in OFF delay timer (approx. 200ms) makes it possible to extend the load operating time.

4. Wiring should be kept as short as possible.
<Reed switch>
As the length of the wiring to a load gets longer, the rush current at switching ON becomes greater, and this may shorten the product's life. (The switch will stay ON all the time).

1) For an auto switch without a contact protection circuit, use a contact protection box when the wire length is 5m or longer.
2) Even if an auto switch has a built-in contact protection circuit, when the wiring is more than 30m long, it is not able to adequately absorb the rush current and its life may be reduced. It is again necessary to connect a contact protection box in order to extend its life. Please contact SMC in this case.

<Solid state switch>

3) Although wire length should not affect switch function, use a wire 100m or shorter.

5. Use caution to internal voltage drop of a switch.
<Reed switch>

1. Switches with an indicator light (except D-A56/A76H/ A96/A96 V/C76/E76A/Z76)

- If auto switches are connected in series as shown below, please note that there will be a large voltage drop because of internal resistance in the light emitting diodes. (Refer to internal voltage drop in the auto switch specifications.)
- [The voltage drop will be "n" times larger when "n" auto switches are connected.]
  The load may be ineffective even though the auto switch function is normal.

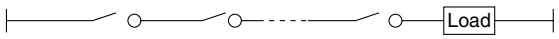

- Similarly, when operating below a specified voltage, it is possible that the load may be ineffective even though the auto switch function is normal. Therefore, the formula below should be satisfied after confirming the minimum operating voltage of the load.

  Power voltage – Internal voltage drop of switch > Minimum operating voltage of load

2) If the internal resistance of a light emitting diode causes a problem, select a switch without an indicator light (D-A6□, A80, A80H, A90, A90V, C80, R80, 90, E80A, Z80).

<Solid state switch>

3) Generally, the internal voltage drop will be greater with a 2-wire solid state auto switch than with a reed switch. Take the same precautions as in 1).
   Also please note that a 12VDC relay is not applicable.

6. Use caution to the leakage current.
<Solid state switch>
With a 2-wire solid state auto switch, current (leakage current) flows to the load to operate the internal circuit even when in the OFF state.

Current to operate load (OFF condition) > Leakage current
If the condition given in the above formula is not met, it will not reset correctly (stays ON). Use a 3-wire switch if this specification cannot be satisfied.
Moreover, leakage current flow to the load will be "n" times larger when "n" auto switches are connected in parallel.

7. Do not use a load that generates surge voltage.
<Reed switch>
When driving a load such as a relay that generates a surge voltage, use a switch with a built-in contact protection circuit or a contact protection box.
<Solid state switch>
Although a zener diode for surge protection is connected to the output side of a solid state auto switch, damage may still occur if the surge is applied repeatedly. When a load, such as a relay or solenoid, which generates surge is directly driven, use a type of switch with a built-in surge absorbing element.

8. Cautions for use in an interlock circuit
When an auto switch is used for an interlock signal requiring high reliability, devise a double interlock system to avoid trouble by providing a mechanical protection function, or by also using another switch (sensor) together with the auto switch.
Also perform periodic maintenance inspections and confirm proper operation.

9. Ensure sufficient space for maintenance activities.
When designing an application, be sure to allow sufficient space for maintenance and inspection.

Courtesy of Steven Engineering, Inc - (800) 258-9200 - sales@steveneng.com - www.stevenengineering.com

Auto switch / Common Precautions 2

Be sure to read before handling. Refer to the main text for precautions for each series.

Mounting/Adjustment

⚠ Warning

1. Do not drop or bump.
Do not drop, bump, or apply excessive impacts (300m/s² or more for reed switches and 1000m/s² or more for solid state switches) while handling. Although the body of the switch may not be damaged, the inside of the switch could be damaged and cause a malfunction.

2. Do not carry a cylinder by the auto switch lead wires.
Never carry a cylinder by its lead wires. This may not only cause broken lead wires, but it may cause internal elements of the switch to be damaged by the stress.

3. Mount switches using the proper tightening torque.
When a switch is tightened beyond the range of tightening torque, the mounting screws or switch may be damaged.
On the other hand, tightening below the range of tightening torque may allow the switch to slip out of position.

4. Mount a switch at the center of the operating range.
Adjust the mounting position of an auto switch so that the piston stops at the center of the operating range (the range in which a switch is ON). (The mounting positions shown in the catalog indicate the optimum position at the stroke end.) If mounted at the end of the operating range (around the borderline of ON and OFF), the operation will be unstable.
<D-M9□>
If this auto switch replaces the conventional model, it may not function depending on the application (shown below) because its operation range is shorter.

- **Applications where at the end, the stopping position shifting range is larger than the operation range**
  e.g. Workpiece pushing, pressing into a hole, or clamping
- **Applications where an auto switch is used to detect intermediate stopping positions (Detecting time is shortened).**

As indicated above, mount a switch at the center of the operating range.

Wiring

⚠ Warning

1. Avoid repeatedly bending or stretching lead wires.
Broken lead wires will result from repeatedly applying bending stress or stretching force to lead wires.

2. Be sure to connect the load before power is applied.
<2-wire type>
If the power is turned on when an auto switch is not connected to a load, the switch will be instantly damaged because of excess current.

3. Confirm proper insulation of wiring.
Be certain that there is no faulty wiring insulation (contact with other circuits, ground fault, improper insulation between terminals, etc.). Damage may occur due to excess current flow into a switch.

4. Do not wire with power lines or high voltage lines.
Wire separately from power lines or high voltage lines, avoiding parallel wiring or wiring in the same conduit with these lines. Control circuits, including auto switches, may malfunction due to

Wiring

⚠ Warning

5. Do not allow short circuiting of loads.
<Reed switch>
If the power is turned on with a load in a short circuited condition, the switch will be instantly damaged because of excess current flow into the switch.
<Solid state switch>
Models M-F9□(V), F9□W(V), J51, G5NB and all models of PNP output switches do not have built-in short circuit prevention circuits. If loads are short circuited, the switches will be instantly damaged.
Use caution to avoid reverse wiring with the brown power supply line and the black output line on 3 -wire type switches.

6. Avoid incorrect wiring.
<Reed switch>
A 24VDC switch with indicator light has polarity. The brown lead wire or terminal No.1 is (+), and the blue lead wire or terminal No.2 is (–).
[In the case of model D-97, the side without indicator is (+) and the blue line side is (–).]

1) If connections are reversed, a switch will operate, however, the light emitting diode will not light up.
   Also please note that a current greater than the maximum specified one will damage a light emitting diode and make it inoperable.
   Applicable models
   D-A73, A73H, A73C, C73, C73C, E73A, Z73, R73
   D-97, 93A, A93, A93V
   D-A33, A34, A33A, A34A, A44, A44A
   D-A53, A54, B53, B54
2) However, when using a 2 color indication auto switch (D-A79W, A59W, B59W), be aware that the switch will constantly remain ON if the connections are reversed.

<Solid state switch>

1) If connections are reversed on a 2-wire type switch, the switch will not be damaged if protected by a protection circuit, but the switch will always stay in an ON state. However, it is still necessary to avoid reversed connections, since the switch could be damaged by a load short circuit in this condition.
2) If connections are reversed (power supply line (+) and power supply line (–) on a 3-wire type switch, the switch will be protected by a protection circuit. However, if the power supply line (+) is connected to the blue wire and the power supply line (–) is connected to the black wire, the switch will be damaged.

<D-M9□>
D-M9□ does not have built-in short-circuit prevention circuits. Reverse connection of power supply line (+) and (–) may damage the switch.

Courtesy of Steven Engineering, Inc - (800) 258-9200 - sales@steveneng.com - www.stevenengineering.com

Auto switch / Common Precautions 3

Be sure to read before handling. Refer to the main text for precautions for each series.

Environment

⚠ Warning

1. Never use in the presence of explosive gases.
Our auto switches are not explosion proof. Never use them in the presence of explosive gas, as this may cause a serious explosion.

2. Do not use in an area where a magnetic field is generated.
Auto switches will malfunction or magnets inside cylinders will become demagnetized. (Please consult with SMC regarding the availability of a magnetic field resistant auto switch.)

3. Do not use in environments where the auto switches will be constantly exposed to water.
Although switches except D-A3□/A44□/G39□/K39□ satisfy the IEC standard IP67 structure (JIS C 0920: anti-immersion structure), do not use switches in applications where continually exposed to water splash or spray. Poor insulation or swelling of the potting resin inside switches may cause malfunction.

4. Do not use in environments with oil or chemicals.
Please consult with SMC if auto switches will be used in an environment with coolants, cleaning solvents, various oils or chemicals. If auto switches are used under these conditions for even a short time, they may be adversely affected by improper insulation, a malfunction due to swelling of the potting resin, or hardening of the lead wires.

5. Do not use in environments with temperature cycles.
Please consult with SMC if switches are to be used where there are temperature cycles other than normal temperature changes, as they may be adversely affected internally.

6. Do not use in environments where there is excessive impact shock.
<Reed switch>
When excessive impact (300 m/s^2 or more) is applied to a reed switch during operation, the contact point may malfunction and generate or cut off a signal momentarily (1ms or less). Please consult with SMC regarding the need to use a solid state switch depending on the environment.

7. Do not use in locations where surges are generated.
<Solid state switch>
When there are units (solenoid type lifters, high frequency induction furnaces, motors, etc.) which generate a large amount of surge in the area around cylinders with solid state auto switches, this may cause deterioration or damage to the switches. Avoid sources of surge generation and crossed lines.

8. Avoid close contact with magnetic substances.
When a magnetic substance (substance attracted by a magnet) is brought into close proximity with an auto switch cylinder, it may cause the auto switches to malfunction due to a loss of the magnetic force inside the cylinder.

Maintenance

⚠ Warning

1. Perform the following maintenance periodically in order to prevent possible danger due to unexpected auto switch malfunction.

1) Securely tighten switch mounting screws.
If screws become loose or the mounting position is dislocated, retighten screws securely after readjusting the mounting position.

2) Confirm that there is no damage to lead wires.
To prevent faulty insulation, replace switches or repair lead wires if damage is discovered.

3) Confirm that the green light on the 2-color indicator type switch lights up.
Confirm that the green LED is ON when stopped at the set position. If the red LED is ON when stopped at the set position, the mounting position is not appropriate. Readjust the mounting position until the green LED lights up.

Other

⚠ Warning

1. Please consult with SMC concerning water resistance, elasticity of lead wires, etc.

∗Lead wire color changes

Lead wire colors of SMC auto switches have been changed in order to meet NECA (Nippon Electric Control Equipment Industries Association) Standard 0402 for production beginning September, 1996 and thereafter.Special care should be taken regarding wire polarity during the time that both old and new colors exist.

2-wire system

	Old	New
Output (+)	Red	Brown
Output (–)	Black	Blue

3-wire system

	Old	New
Power supply +	Red	Brown
Power supply GND	Black	Blue
Output	White	Black

Solid state with diagnostic output

	Old	New
Power supply +	Red	Brown
Power supply GND	Black	Blue
Output	White	Black
Diagnostic output	Yellow	Orange

Solid state with latch type diagnostic output

	Old	New
Power supply +	Red	Brown
Power supply GND	Black	Blue
Output	White	Black
Latch type diagnostic output	Yellow	Orange

⚠ Caution

1. When stripping the cable clad, take care with the orientation of the cable being stripped. The insulator may accidentally be torn or damaged depending on the orientation.(D-M9□ only)

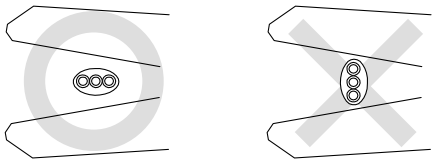

Recommended tools are shown below.

Manufacturer	Model name	Model no.
VESSEL	Wire stripper	No 3000G
TOKYO IDEAL	Strip master	45-089

∗ Stripper for round cable (ø2.0) can be used for a 2-wire type cable.

Courtesy of Steven Engineering, Inc - (800) 258-9200 - sales@steveneng.com - www.stevenengineering.com

Cylinder
Applicable auto switch list

	Cylinder series	CDJ2		CDM2	CDBM2	CDG1		CDA2	CUJ	CDU	CDQS	CDQ2	REC	CXSJ	CXS	MGP	MGF	MXP	MXQ	MXS	CYP	CDQSX	CDQ2X	CDM2X
	Bore size	ø6	ø10/ø16	ø20 to ø40	ø20 to ø40	ø20 to ø63	ø80/ø100	ø40 to ø63	ø6 to ø10	ø6 to ø25	ø12 to ø25	ø32 to ø100	ø20 to ø40	ø6·ø10	ø6 to ø32	ø12 to ø63	ø40/ø63/ø100	ø6 to ø16	ø6 to ø25	ø6 to ø25	ø15/ø32	ø12 to ø25	ø32 to ø63	ø20 to ø40
Reed switch	D-C7/C8	■	■	■	■	■							■											■
	D-C73C/C80C	■	■	■	■	■							■											■
	D-B5/B6			■	■	■	■	■					■											■
	D-B59W			■	■	■	■	■					■											■
	D-A3/A4							■					■											
	D-A3□A/A44A			■	■																			■
	D-A3□C/A44C							■																
	D-A7/A8		■									■											■	
	D-A7□H/A80H		■									■											■	
	D-A73C/A80C		■									■											■	
	D-A79W		■									■											■	
	D-A5/A6							■																
	D-A59W							■																
	D-A9	*	*	*	*	*	*	*		■	■	■	*	■		*		■	■	■		■	■	*
	D-A9□V							*		■	■	■		■		*		■	■	■		■	■	
	D-Z7/Z8							■							■	■	■				■			
Solid state switch	D-H7	■	■	■	■	■							■											■
	D-H7C	■	■	■	■	■							■											■
	D-H7BAL	■	■	■	■	■							■											
	D-H7□F	■	■	■	■	■							■											■
	D-H7□W	■	■	■	■	■							■											■
	D-G5/K5						■	■																
	D-G5BAL				■		■	■																
	D-G59F						■	■																
	D-G5NTL			■	■		■	■					■											
	D-G5□W/K59W						■	■																
	D-G39/K39							■					■											
	D-G39A/K39A			■	■																			■
	D-F7/J7		■									■											■	
	D-J79C		■									■											■	
	D-F7□F		■									■											■	
	D-F7BAL		■									■											■	
	D-F7BAVL		■									■											■	
	D-F7□V		■									■											■	
	D-F7NTL		■									■											■	
	D-F7□W (V)		■									■											■	
	D-F5/J5							■																
	D-F5BAL							■																
	D-F5□W/J59W							■																
	D-F5□F							■																
	D-F5NTL							■																
	D-G39C/K39C							■																
	D-M9	*	*	*	*	*	*	*	■	■	■	■	*	■		*		■	■	■		■	■	*
	D-M9□V							*	■	■	■	■		■		*		■	■	■		■	■	
	D-F9□W	*	*	*	*	*	*	*		■	■	■	*	■		*		■	■	■		■	■	*
	D-F9□WV							*		■	■	■		■		*		■	■	■		■	■	
	D-F9BAL							*			■	■		■		*						■	■	
	D-Y59A/Y7P/Y59B							■							■	■	■				■			
	D-Y69A/Y7PV/Y69B							■							■	■	■				■			
	D-Y7□W							■							■	■	■				■			
	D-Y7□WV							■							■	■	■				■			
	D-Y7BAL							■								■	■							
	D-P5□WL							■				■				■								
	D-F9G/H	*	*	*	*	*	*	*		■	■	■	*	■		*		■	■	■		■	■	*
	D-Y7G/H							■							■	■	■				■			
	D-G5NBL			■			■	■																
	D-F8□								■															

Please refer to the next page for applicable auto switches and cylinders in the fields marked with asterisks (*).

SMC

Courtesy of Steven Engineering, Inc - (800) 258-9200 - sales@steveneng.com - www.stevenengineering.com

Compact auto switch mounting bracket

Mounting brackets used for installing the compact auto switches D-A9/M9/F9 onto band mounting / tie-rod mounting / groove mounting style cylinders are available.

Band mounting

Applicable cylinder
10-/11-/21-/22-CDJ2 Series
10-/11-/21-/22-CDM2 Series
10-/11-/21-/22-CDG1 Series
10-/11-REC Series
10-/11-CDM2X Series

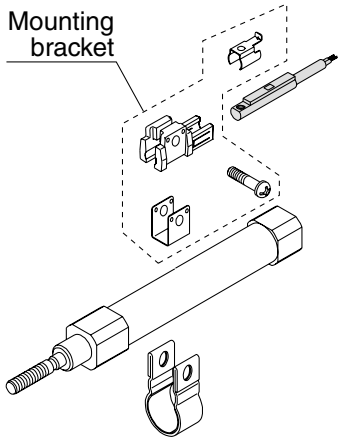

Applicable auto switch

Solid state switch
D-M9
D-F9□W (2-color indication)

Reed switch
D-A9

Perpendicular entry is unavailable.

Tie-rod mounting

Applicable cylinder
10-/11-/21-/22-CDA2 Series

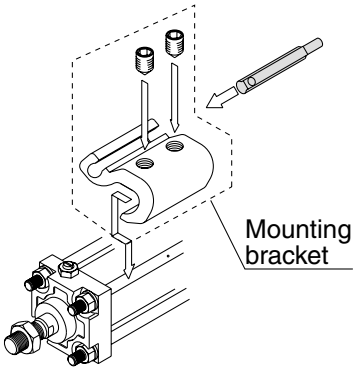

Groove mounting

Applicable cylinder
12-/13-/21-/22-MGP Series

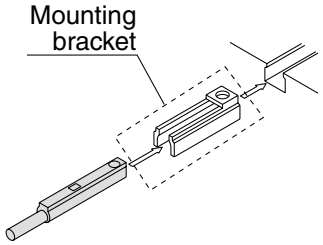

Applicable auto switch

Solid state switch
D-M9/M9□V
D-F9□W/F9□WV (2-color indication)
D-F9BAL (water resistant type)

Reed switch
D-A9/D-A9□V

Courtesy of Steven Engineering, Inc - (800) 258-9200 - sales@steveneng.com - www.stevenengineering.com

Safety Instructions

These safety instructions are intended to prevent hazardous situations and/or equipment damage. These instructions indicate the level of potential hazard with the labels of **"Caution," "Warning"** or **"Danger."** They are all important notes for safety and must be followed in addition to International Standards (ISO/IEC), Japan Industrial Standards (JIS)*1) and other safety regulations*2).

* 1) ISO 4414: Pneumatic fluid power – General rules relating to systems.
ISO 4413: Hydraulic fluid power – General rules relating to systems.
IEC 60204-1: Safety of machinery – Electrical equipment of machines. (Part 1: General requirements)
ISO 10218-1992: Manipulating industrial robots -Safety.
JIS B 8370: General rules for pneumatic equipment.
JIS B 8361: General rules for hydraulic equipment.
JIS B 9960-1: Safety of machinery – Electrical equipment of machines. (Part 1: General requirements)
JIS B 8433-1993: Manipulating industrial robots - Safety.
etc.
* 2) Labor Safety and Sanitation Law, etc.

⚠ Caution: Operator error could result in injury or equipment damage.

⚠ Warning: Operator error could result in serious injury or loss of life.

⚠ Danger : In extreme conditions, there is a possibility of serious injury or loss of life.

⚠ Warning

1. **The compatibility of the product is the responsibility of the person who designs the equipment or decides its specifications.**
   Since the product specified here is used under various operating conditions, its compatibility with specific equipment must be decided by the person who designs the equipment or decides its specifications based on necessary analysis and test results. The expected performance and safety assurance of the equipment will be the responsibility of the person who has determined its compatibility with the product. This person should also continuously review all specifications of the product referring to its latest catalog information, with a view to giving due consideration to any possibility of equipment failure when configuring the equipment.
2. **Only personnel with appropriate training should operate machinery and equipment.**
   The product specified here may become unsafe if handled incorrectly. The assembly, operation and maintenance of machines or equipment including our products must be performed by an operator who is appropriately trained and experienced.
3. **Do not service or attempt to remove product and machinery/equipment until safety is confirmed.**
   1. The inspection and maintenance of machinery/equipment should only be performed after measures to prevent falling or runaway of the driven objects have been confirmed.
   2. When the product is to be removed, confirm that the safety measures as mentioned above are implemented and the power from any appropriate source is cut, and read and understand the specific product precautions of all relevant products carefully.
   3. Before machinery/equipment is restarted, take measures to prevent unexpected operation and malfunction.
4. **Contact SMC beforehand and take special consideration of safety measures if the product is to be used in any of the following conditions.**
   1. Conditions and environments outside of the given specifications, or use outdoors or in a place exposed to direct sunlight.
   2. Installation on equipment in conjunction with atomic energy, railways, air navigation, space, shipping, vehicles, military, medical treatment, combustion and recreation, or equipment in contact with food and beverages, emergency stop circuits, clutch and brake circuits in press applications, safety equipment or other applications unsuitable for the standard specifications described in the product catalog.
   3. An application which could have negative effects on people, property, or animals requiring special safety analysis.
   4. Use in an interlock circuit, which requires the provision of double interlock for possible failure by using a mechanical protective function, and periodical checks to confirm proper operation.

Courtesy of Steven Engineering, Inc - (800) 258-9200 - sales@steveneng.com - www.stevenengineering.com

Safety Instructions

⚠Caution

The product is provided for use in manufacturing industries.
The product herein described is basically provided for peaceful use in manufacturing industries.
If considering using the product in other industries, consult SMC beforehand and exchange specifications or a contract if necessary. If anything is unclear, contact your nearest sales branch.

Limited Warranty and Disclaimer/Compliance Requirements

The product used is subject to the following "Limited Warranty and Disclaimer" and "Compliance Requirements". Read and accept them before using the product.

Limited Warranty and Disclaimer

1. **The warranty period of the product is 1 year in service or 1.5 years after the product is delivered.*3)**
   Also, the product may have specified durability, running distance or replacement parts. Please consult your nearest sales branch.
2. **For any failure or damage reported within the warranty period which is clearly our responsibility, a replacement product or necessary parts will be provided.**
   This limited warranty applies only to our product independently, and not to any other damage incurred due to the failure of the product.
3. **Prior to using SMC products, please read and understand the warranty terms and disclaimers noted in the specified catalog for the particular products.**

   ∗ 3) Vacuum pads are excluded from this 1 year warranty.
   A vacuum pad is a consumable part, so it is warranted for a year after it is delivered.
   Also, even within the warranty period, the wear of a product due to the use of the vacuum pad or failure due to the deterioration of rubber material are not covered by the limited warranty.

Compliance Requirements

When the product is exported, strictly follow the laws required by the Ministry of Economy, Trade and Industry (Foreign Exchange and Foreign Trade Control Law).

Courtesy of Steven Engineering, Inc - (800) 258-9200 - sales@steveneng.com - www.stevenengineering.com

Clean series: Common Precautions 1

Be sure to read before handling.
Refer to the main text for detailed precautions on every series.

Air Supply

⚠ Caution

System Configuration

Refer to the "Air Preparation System" below for the quality of compressed air before configuring the system.

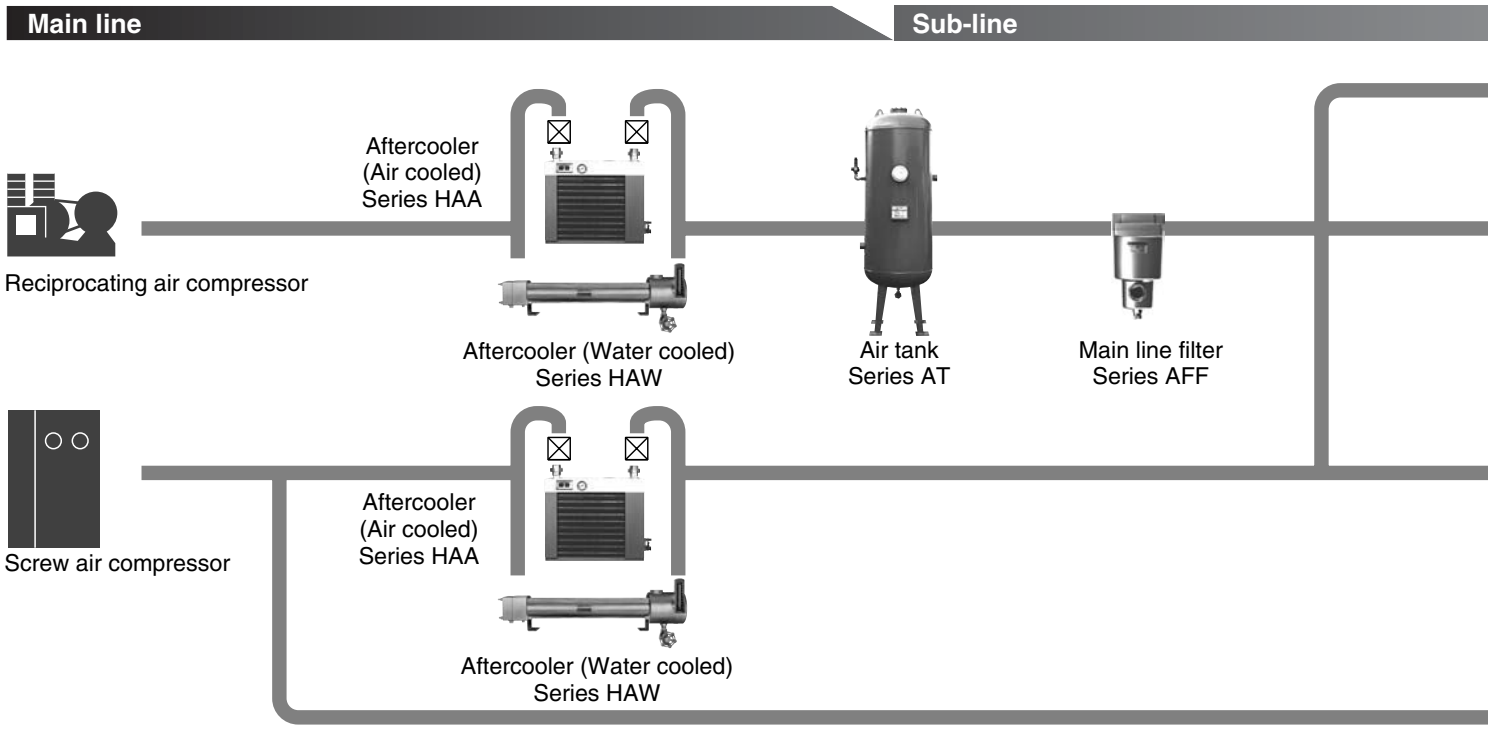

Piping

1. Provide an inclination of 1cm per meter in the direction of the air flow to the main piping.
2. If there is a line branching from the main piping, provide an outlet of compressed air on top using a tee so that drainage accumulated in the piping will not flow out.
3. Provide a drainage mechanism at every recessed point or dead end to prevent drain accumulation.
4. For future piping extensions, plug the end of the piping with a tee.
5. Before piping
   Before piping, the piping should be thoroughly blown out with air (flushed) or washed to remove chips, cutting oil and other debris from inside the pipe.
6. Wrapping of pipe tape
   When screwing piping or fittings into ports, ensure that chips from the pipe threads or sealing material do not get inside the valve.
   Also, when pipe tape is used, leave 1.5 to 2 thread ridges exposed at the end of the threads.

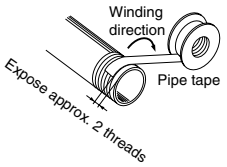

7. If air with a low dew point (–40°C or less) is required, do not use nylon tube or resin fitting (except for fluorine resin) for the outlet side of the membrane air dryer or heatless air dryer. Nylon tubing could be affected by the ambient air and it thus might not be possible to achieve the prescribed low dew point at the end of the tube. Therefore, for low dew point air, use stainless steel or fluorine tube.

Maintenance

1. If the heatless air dryer Series ID is left unused for a long period, the absorbent may be moistened. Prior to use, close the valve on the outlet side of the dryer for regeneration and drying.

Caution on Design

Employ a safe design, so that the following unexpected conditions will not occur.

⚠ Warning

1. **Provide a design that prevents high-temperature compressed air from flowing into the outlet side of the cooling equipment.**
   If the flow of the coolant water in a water-cooled aftercooler is stopped or if the fan motor of an air cooled aftercooler is stopped, the high-temperature compressed air will flow to the outlet side of the cooling equipment, causing the equipment on the outlet side (such as the AFF, AM, AD, or IDF series) to be damaged or to malfunction.
2. **Provide a design in which interruptions in the supply of compressed air are taken into consideration.**

SMC

Courtesy of Steven Engineering, Inc - (800) 258-9200 - sales@steveneng.com - www.stevenengineering.com

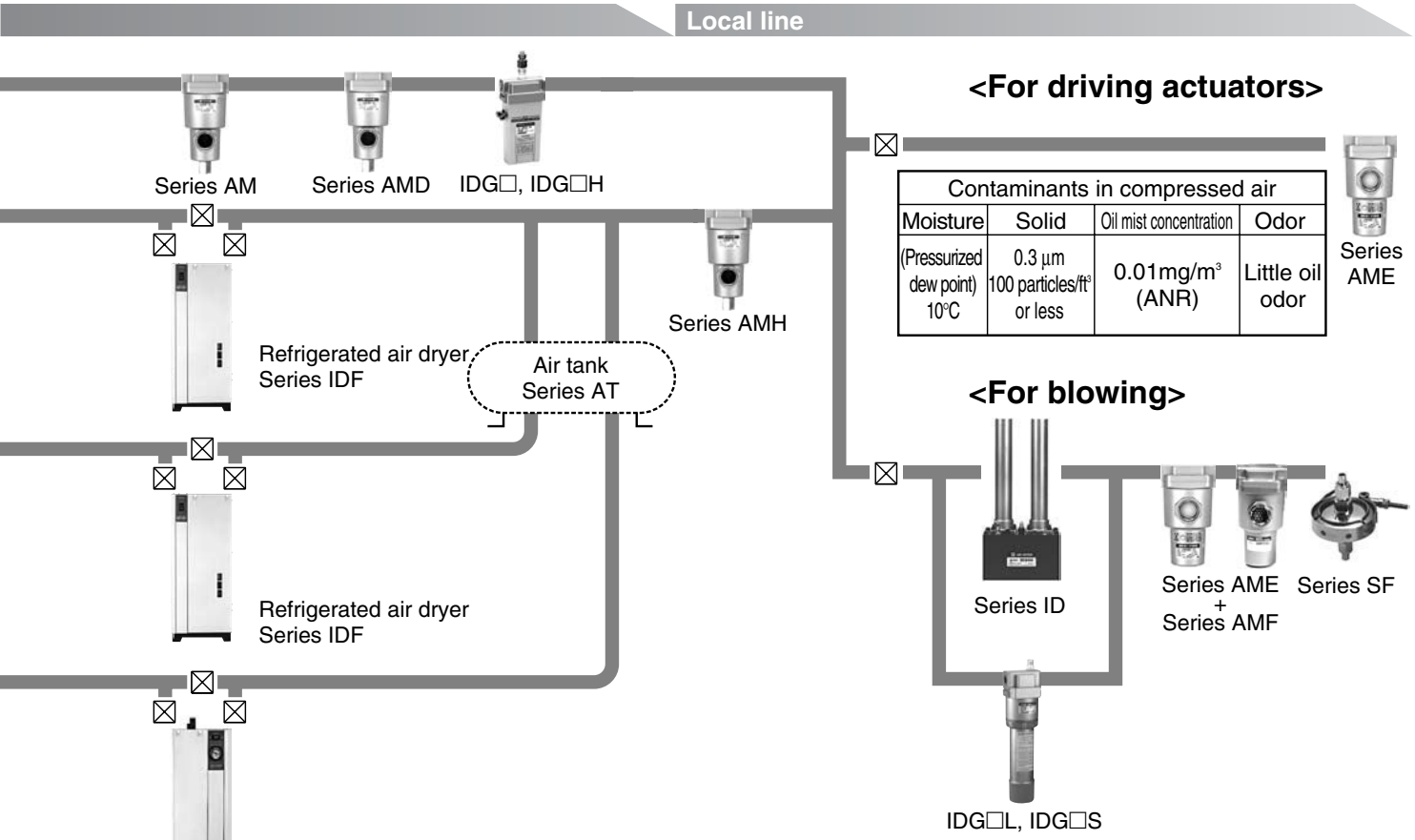

Contaminants in compressed air			
Moisture	Solid	Oil mist concentration	Odor
(Pressurized dew point) 10°C	0.3 μm 100 particles/ft³ or less	0.01mg/m³ (ANR)	Little oil odor

Contaminants in compressed air			
Moisture	Solid	Oil mist concentration	Odor
Atmospheric pressure dew point – 50°C or less	0.01 μm 1 particle/ft³ or less	0.004mg/m³ (ANR)	No oil odor

There are cases in which compressed air cannot flow due to the freezing of the refrigerated air dryer or a malfunction (heatless dryer) in the switching valve.

⚠ Caution

3. Design a layout in which the leakage of the coolant water and the dripping of condensation are taken into consideration.
A water-cooled aftercooler that uses coolant water could lead to water leakage due to freezing. Depending on the operating conditions, the refrigerated air dryer and its downstream pipes could create a dripping of water droplets due to condensation formed by supercooling.

4. Provide a design that prevents back pressure and backflow.
The generation of back pressure and backflow could lead to equipment damage.
Take appropriate safety measures, including the proper installation methods.

5. Depending on the model and operating conditions, the life span of air cylinders may be shortened when they are used in an environment of super dry air (atmospheric pressure dew point: –50°C) or high-purity nitrogen gas or when such super dry air or high-purity nitrogen gas is used as the fluid.
Please contact with SMC for further details on applicable series, models, operating conditions and life spans.

6. Blowing system
Even a small amount of dust can be a problem for blowing systems.
Install Clean Gas Filter Series SF to the end of the blowing line.

Courtesy of Steven Engineering, Inc - (800) 258-9200 - sales@steveneng.com - www.stevenengineering.com

Clean series: Common Precautions 2

Be sure to read before handling.
Refer to the main text for detailed precautions on every series.

Piping: Inside of Clean Room

⚠ Caution

1. **Do not make the piping for the air cylinder relief port and regulator breathing vent piping common with solenoid valve exhaust piping.**
   This can cause malfunctions in the air cylinder or regulator pressure change.

2. **Arrange the piping so that the exhaust air of the solenoid valves is exhausted outside of the clean room.**

3. **Air filter drain piping**
   Exhaust drainage outside the clean room through piping from the drain guide of the air filter.

4. **Arrange the membrane dryer air purge piping using a standard size tubing so that air is exhausted outside the clean room.**

5. **Take precautions so that the threaded portion of the piping connection or the tubing connection will not be loosened.**
   Take sufficient precautions against the piping shaking along with the vibration of the equipment.

6. **Use polyurethane tubing containing no plasticizer.**

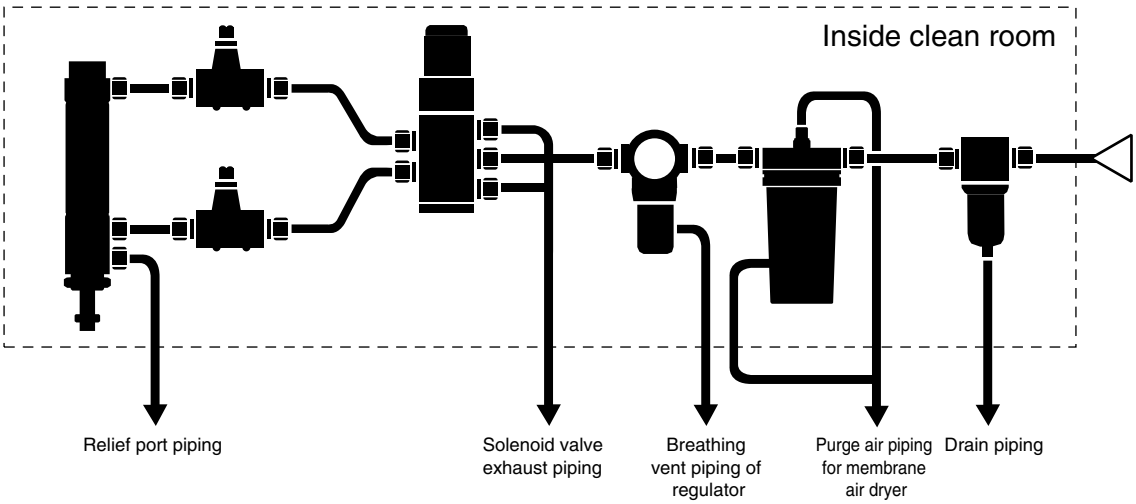

Handling

⚠ Caution

1. **The inner bag of a double-packed clean series package should be opened in a clean room or clean environment.**

2. **When standard pneumatic equipment is brought into a clean room, spray high-purity air upon it and remove dust thoroughly by wiping the external surfaces of the cylinder tube, solenoid valves and air line equipment with alcohol.**

3. **To replace parts or disassemble the product in a clean room, first exhaust the compressed air inside the piping to the outside of the clean room before the work.**

4. **Do not use rotation type mounting brackets such as clevises, trunnions, etc.. They will generate a considerable amount of particulate matter due to the sliding friction between the metal parts.**

Lubrication / In the Case of Actuator

⚠ Warning

Be sure to wash your hands after handling fluororesin grease.
The grease itself is not hazardous but it can produce a hazardous gas at temperatures exceeding 260°C.

⚠ Caution

1. **Do not use any greases but those specified by SMC.**
   Use of greases not specified will cause malfunctions or particle generation.

2. **Do not lubricate the products since they are of a nonlubricant type.**
   As the clean series actuators are lubricated at the factory with fluororesin grease, the product specifications may not be satisfied if turbine oil or other such lubricants are applied.

Piston speed

⚠ Caution

The cylinder speed upper limit that retains the particle generation grade is 400 mm/s.

Courtesy of Steven Engineering, Inc - (800) 258-9200 - sales@steveneng.com - www.stevenengineering.com

Clean series: Common Precautions 3

Be sure to read before handling.
Refer to the main text for detailed precautions for every series.

Suction flow rate of vacuum suction types

⚠ Caution

For the vacuum suction types (Series 11-/13-/22-), perform vacuum suction at the vacuum port to retain the particle generation grade.

The optimum suction flow rate varies depending on series and sizes. Refer to "Suction flow rate of vacuum suction type (Reference values)" for each series. (The vacuum pressure will be approximately -27 kPa at around 1 m from the vacuum suction port.) Please consult SMC for further details.

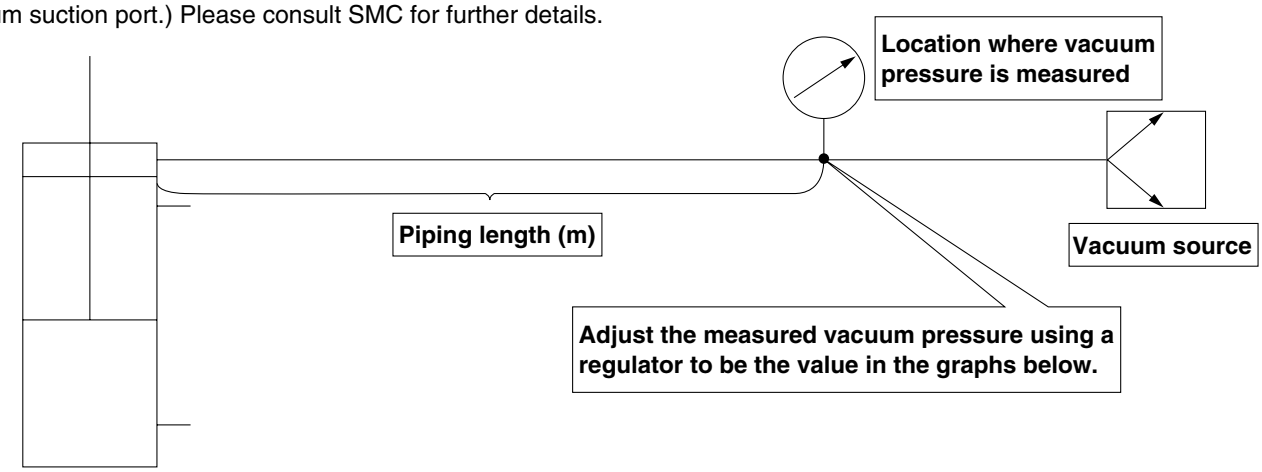

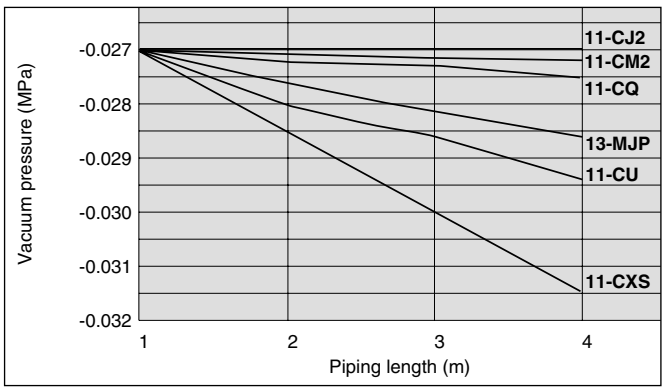

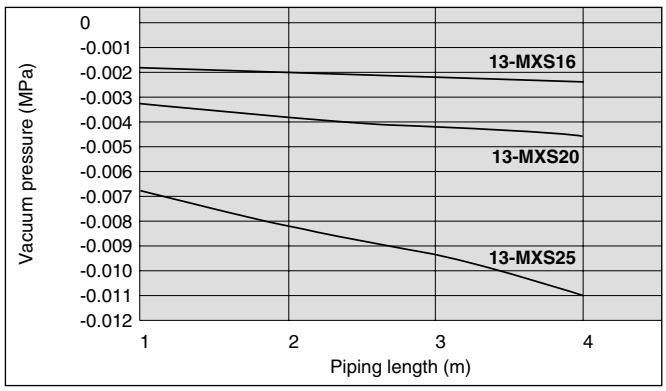

Courtesy of Steven Engineering, Inc - (800) 258-9200 - sales@steveneng.com - www.stevenengineering.com