Contact our sales office for delivery dates and prices as this is a special model.

Specialized Product **P.G.** Point to Group information

IO-Link Compatible Electro-Pneumatic Regulator

ITV10□0/20□0/30□0-X395

Features

IO-Link communication enables users to check device information and monitor device status in addition to performing pressure control.

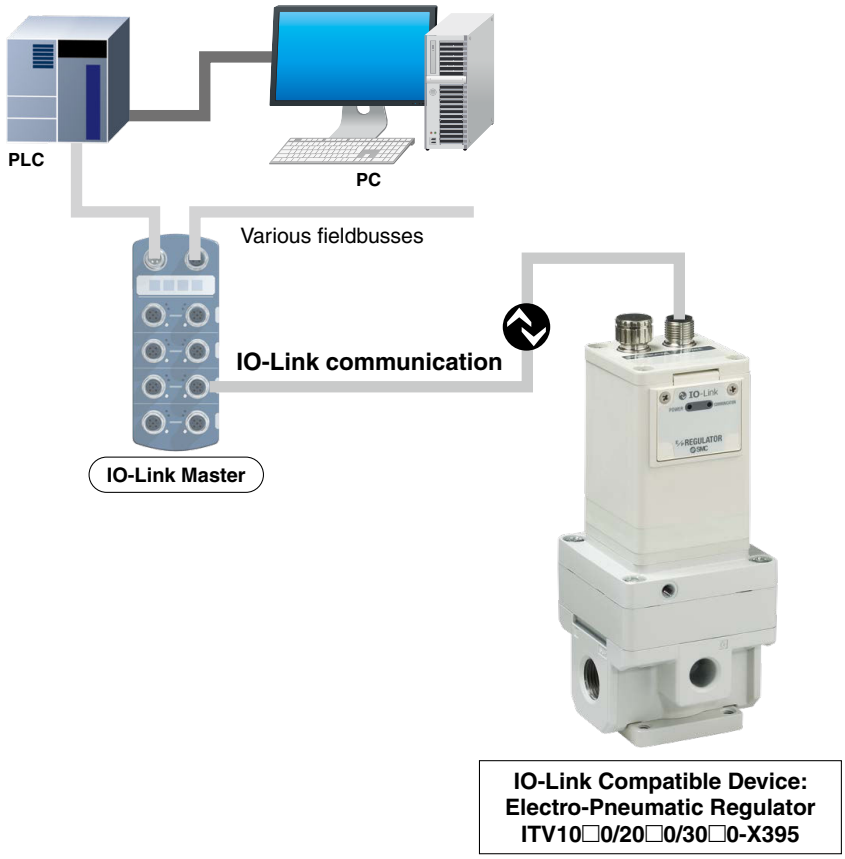

IO-Link

IO-Link is an open communication interface technology between the sensor/actuator and the I/O terminal that is an international standard, IEC61131-9.

Applications

- **For the manufacturing of various products**

The set pressure analog value can be changed to control the indentation pressure applied to each workpiece. This allows for a variety of products to be manufactured on the same line.

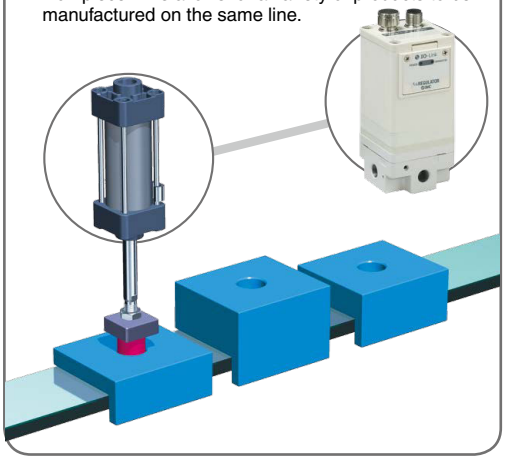

Send and receive pressure control signals, device information, and the set contents.

Sending and receiving of device information, the set contents, and condition monitoring data

<Device Information> Manufacturer's name, product number, version information

<Set Contents> Set pressure value, gain/sensitivity adjustment

<Conditioning Monitoring> Output pressure value

The IO-Link master and unit can be connected with one cable.

Only a single cable combining the communication wire and the power supply wire is required.

Uses 4-wire unshielded cables

Special communication cables are not necessary.

A conventional 4-wire unshielded cable can be used for input and output of sensors, switches, etc.

(Recommended specifications: Conductor resistance 3Ω, Wire-to-wire capacitance 3 nF or less, 20 m or less)

⚠ Caution To ensure the safest possible operation of this product, please be sure to thoroughly read the **"Safety Instructions"** in our "Best Pneumatics" catalog before use.

SMC Corporation 4-14-1, SOTO-KANDA, CHIYODA-KU, TOKYO 101-0021, JAPAN **URL: http://www.smcworld.com**

©2018 SMC Corporation All Rights Reserved

SP175X-006E
P: WR Ⓐ

Courtesy of Steven Engineering, Inc - (800) 258-9200 - sales@steveneng.com - www.stevenengineering.com

Specifications

Standard Specification

Item		ITV1010 ITV2010 ITV3010	ITV1030 ITV2030 ITV3030	ITV1050 ITV2050 ITV3050
Minimum supply pressure		Set pressure +0.1 MPa		
Maximum supply pressure		0.2 MPa	1.0 MPa	
Set pressure range		0.005 to 0.1 MPa	0.005 to 0.5 MPa	0.005 to 0.9 MPa
Power supply	**Voltage**	24 VDC ±10%		
	Current consumption	0.12 A or less		
Linearity		±1% F.S. or less		
Hysteresis		0.5% F.S. or less		
Repeatability		±0.5% F.S. or less		
Sensitivity		0.2% F.S. or less		
Temperature characteristics		±0.12% F.S./°C or less		
Ambient and fluid temperatures		0 to 50°C (No condensation)		
Enclosure		IP65		
Weight	**ITV10□□**	355 g		
	ITV20□□	455 g		
	ITV30□□	750 g		
Standards		CE marking, UL		

Communication Specifications

Item	ITV10□0/20□0/30□0-X395
Protocol	IO-Link version 1.1
Communication speed	COM3 (230.4 kbps)
IO-Link port	Class A
IO-Link type	Device
Vendor ID	131
Process data	Input: 2 bytes, Output: 2 bytes

Wiring Specifications

Power supply connector

M12 4-pin plug, A-coded

No.	Designation	Function
1	L+ (Vcc)	+24 V for control unit
2	–	Not used
3	L– (GND)	0 V for control unit
4	C/Q	IO-Link communication data

Mating cable examples [M12 connector (socket) — Separate lines]
: P398020-500-3 (3 m, straight, 4 cores)
: P398020-501-3 (3 m, angle, 4 cores)
: EX500-AP010-S (1 m, straight, 5 cores)
: EX500-AP010-A (1 m, angle, 5 cores)
: EX500-AP050-S (5 m, straight, 5 cores)
: EX500-AP050-A (5 m, angle, 5 cores)

[M12 connector (socket) — M12 connector (plug)]
: PCA-1557769 (3 m, straight, 4 cores)

∗ IODD files are required to configure this product.
Please contact SMC for the IODD files.
Also, please contact SMC for the operation manual.

Courtesy of Steven Engineering, Inc - (800) 258-9200 - sales@steveneng.com - www.stevenengineering.com

This product uses the following system to check operation.

1. When IO-Link is used from the master Fieldbus via the IO-Link master

[IO-Link Master List]

Manufacturer	Master Fieldbus	Part number
Balluff	Profinet	BNI PNT-508-105-Z015
	Profibus	BNI PBS-502-101-Z001

2. When the IO-Link master is mounted on the PLC to use IO-Link

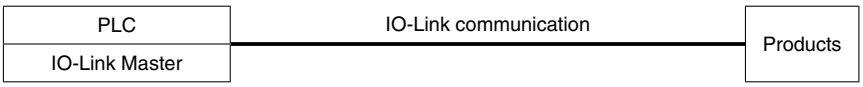

[IO-Link Master List]

Manufacturer	PLC Series
Siemens	ET200SP

How to Order

ITV 2 0 1 0 - IO □ 2 □ S - X395

Model

1	1000 type
2	2000 type
3	3000 type

Pressure range

1	0.1 MPa
3	0.5 MPa
5	0.9 MPa

Power supply voltage

0	24 VDC

Communication model

IO	IO-Link

Thread type

Nil	Rc
N	NPT
T	NPTF
F	G

Port size

1	1/8 (1000 type)
2	1/4 (1000, 2000, 3000 type)
3	3/8 (2000, 3000 type)
4	1/2 (3000 type)

Bracket

Nil	Without bracket
B	Flat bracket
C	L-bracket

Cable connector type

S	Straight type 3 m
L	Right angle type 3 m
N	Without cable connector

∗ Refer to the **Web Catalog** for brackets and cables.

Courtesy of Steven Engineering, Inc - (800) 258-9200 - sales@steveneng.com - www.stevenengineering.com

Dimensions

[mm]

ITV10□0-X395

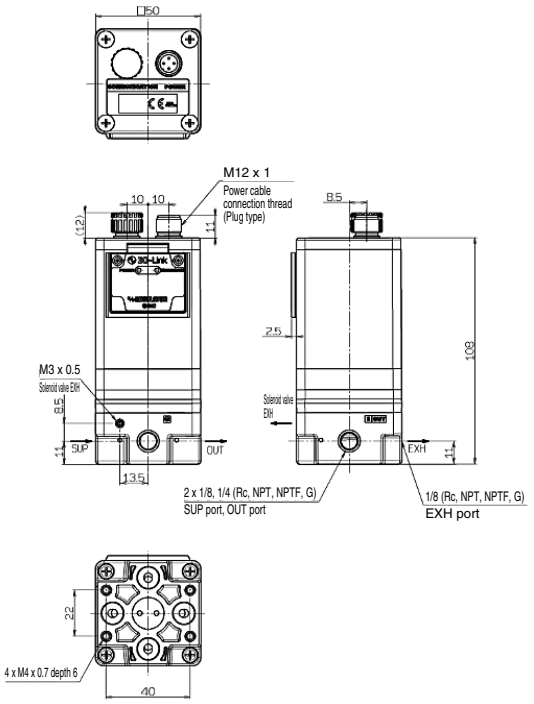

ITV20□0-X395

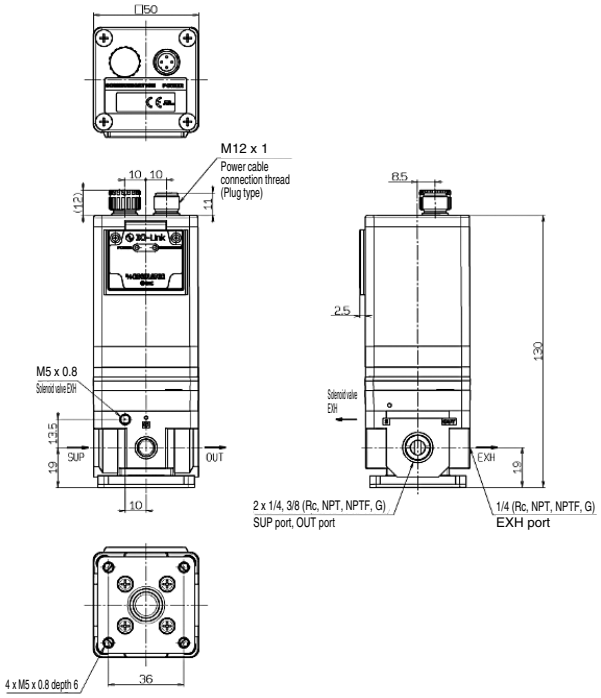

ITV30□0-X395

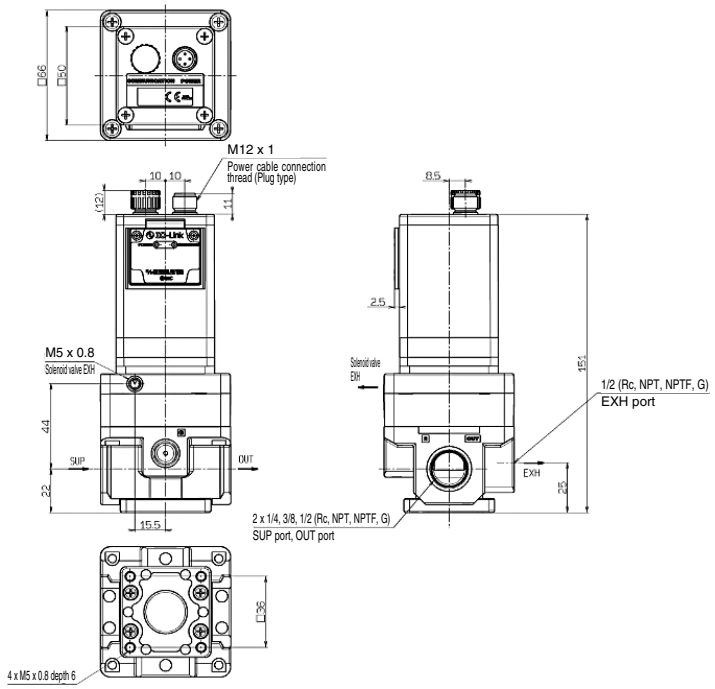

⚠ Caution

- When the product is in an “as-shipped” condition, the output pressure when a 0% input signal is applied is 0 MPa. However, there are some cases in which there is a residual pressure of 0.005 MPa or less.
  If the pressure needs to be reduced to 0 MPa, install a 3-port valve on the output side to exhaust the residual pressure.
- The M12 connector on which the word “COMMUNICATION” is printed should not be used, so do not remove the cap.

Courtesy of Steven Engineering, Inc - (800) 258-9200 - sales@steveneng.com - www.stevenengineering.com